NO.	E1FD-3652
ISSUED:	DEC.2011
REVISED:	FEB.2012

HOSHIZAKI
MODULAR CUBER

MODEL **IM-65NE**
IM-65NE-25

PARTS LIST

[HE, GRAM]

B-1 JAN. 2012

AUXILIARY CODE

U - 1

The auxiliary code is the first two characters in the serial number. The first character indicates the production year. Years progress or regress in alphabetical order. The series of letters and skipped letters depend on UL listing, production, and model. See the auxiliary code(s) and corresponding year(s) on the front cover.

The second character indicates significant part changes within the same year. Base is "1" and this number advances for each change. If there is no significant part change at the turn of the year, this number starts from "0."

MARKS LOCATED UNDER THE AUXILIARY CODE

- \- = Part deleted.
- x = Part deleted and replaced by "o" part.
- o = New part in place of "x" part.

FASTENER PART NUMBER

SCREWS

F S T 0 3 0 6 F 0

- Special treatment (0 - 9)
- Material *1
- Length (mm)
- Nominal diameter (mm)
- Description *2
- Fastener

NUTS & WASHERS

F W S P 0 5 S 0

- Special treatment (0 - 9)
- Material *1
- Nominal diameter (mm)
- Description *2
- Fastener

*1 Material

F: Steel
S: Austenitic stainless steel
M: Martensitic stainless steel
B: Copper alloy
P: Polycarbonate
N: Polyamide
V: PVC
A: ABS
X: Polyacetal
L: Aluminum

*2 Description

First letter
S: Machine screw
T: Tapping screw
M: Wood screw
B: Bolt
W: Washer
N: Nut

A. ICE CUBER ASSY (1／2)

(B−1) and later

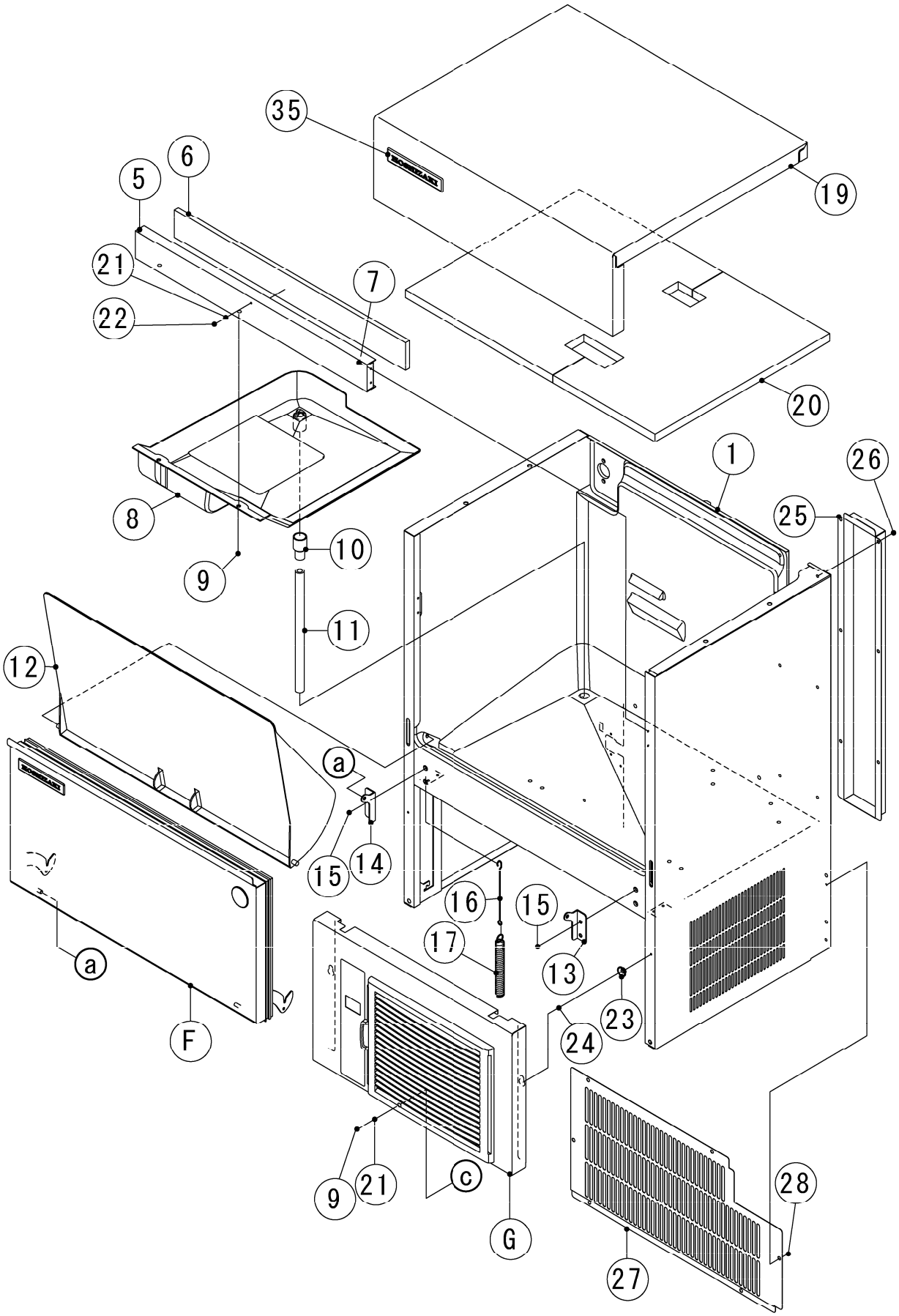

A. ICE CUBER ASSY (2／2)

(B−1) and later

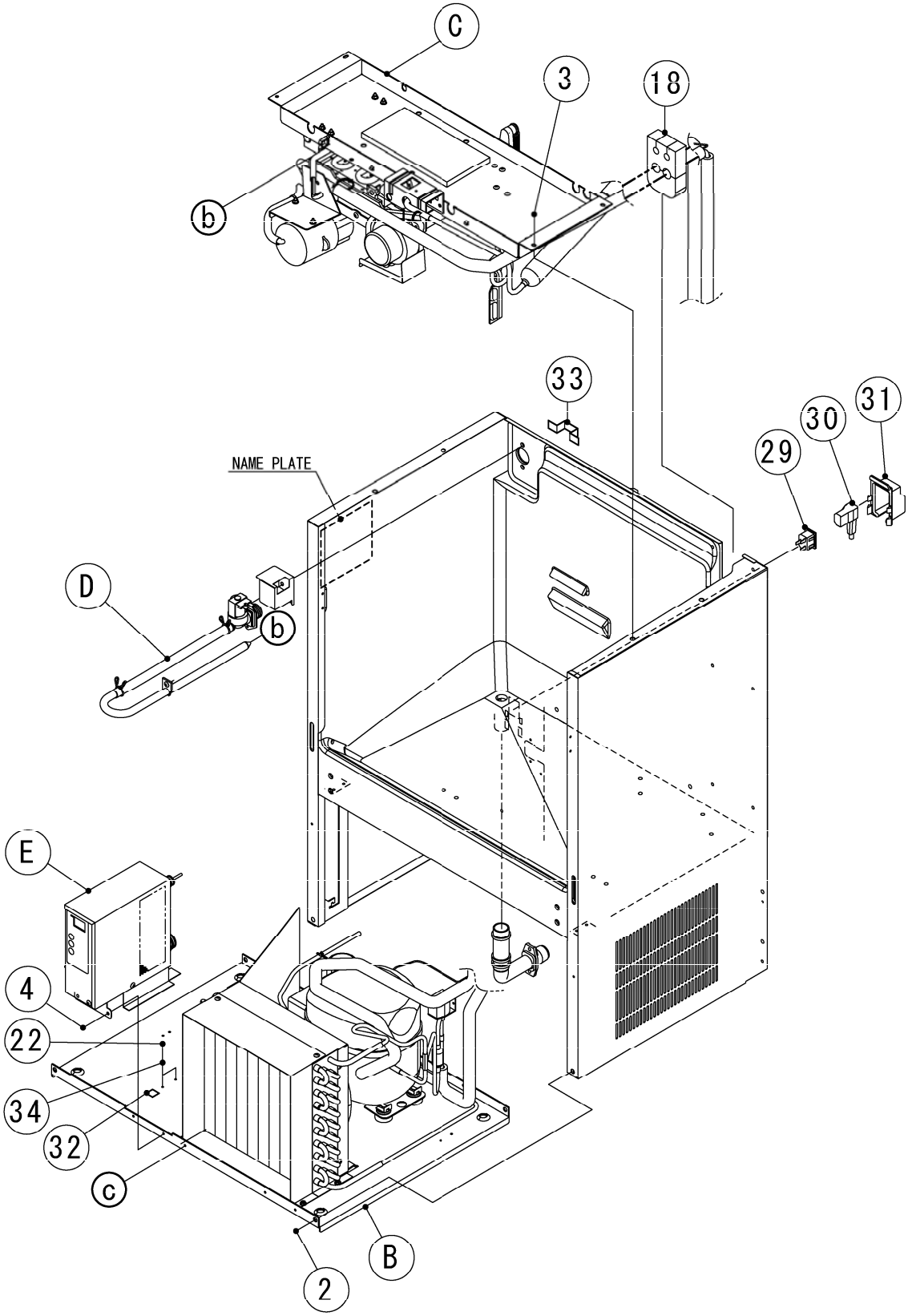

HE,GRAM

MODEL: **IM-65NE**
IM-65NE-25

TITLE:**A.ICE CUBBER ASSY**

(1/2)

INDEX NO.	DESCRIPTION	MATERIAL OR MODEL NUMBER	PART NUMBER	REQ'D NUMBER			
				B-1			
B	REFRIGERATION ASSY	(IM-65NE)	1H4912A01	1			
		(IM-65NE-25)	1H4912001	1			
C	ICE MAKING MECHANISM ASSY	(IM-65NE)	1H4910A01	1			
		(IM-65NE-25)	1H4910001	1			
D	WATER CIRCUIT ASSY		3Y5857A01	1			
E	CONTROL BOX ASSY		2X0439A02	1			
F	DOOR ASSY		3Y5644A02	1			
G	FRONT PANEL LOWER ASSY		3Y5615A02	1			
1	UNIT FRAME		1H4909G01	1			
2	TRUSS HEAD TAPPING SCREW T2	6*16	1H4196Z02	4			
3	TRUSS HEAD TAPPING SCREW T2		FT20410M0	4			
4	FLANGE BOLT (S-TITE)		FTR0408M0	2			
5	FRONT FRAME		3H1678-12	1			
6	INSULATION - FRONT FRAME		4H2317-03	1			
7	RIVET	SSD42SSBS(t1.6～3.2)	7170-0002	4			
8	DRAIN PAN		2H1441-02	1			
9	TRUSS HEAD TAPPING SCREW (S-TITE)		FTS0408M0	3			
10	DRAIN TUBE		4H2585-01	1			
11	DRAIN PIPE		4Y7493P03	1			
12	SLOPE		2H1349-02	1			
13	HINGE (RIGHT)		4H2583-01	1			
14	HINGE (LEFT)		4H2584-01	1			
15	HEX HEAD BOLT (SPRING WASHER AND FLAT WASHER)		FBK0616S0	4			
16	HOOK		404060-10	1			
17	SPRING		4H0823-01	1			
18	INSULATION-BIN		4Y7416P01	1			
19	FRONT PANEL(UPPER)	(HE) Including No. 35	3Y5548G03	1			
		(GRAM) Including No. 35	3Y5548003	1			
20	INSULATION - TOP		3Y5960P01	1			
21	SPRING WASHER		FWSP04S0	2			
22	TRUSS HEAD MACHINE SCREW		FST0408S0	3			
23	TAPER COLLAR		4H0171-01	2			
24	RIVET	SSD42BS	7170-0001	2			
25	COVER - PIPE		3Y5869M01	1			

HE,GRAM

MODEL: **IM-65NE**
IM-65NE-25

TITLE:**A.ICE CUBBER ASSY**

(2/2)

INDEX NO.	DESCRIPTION	MATERIAL OR MODEL NUMBER	PART NUMBER	REQ'D NUMBER			
				B-1			
26	TRUSS HEAD TAPPING SCREW T2		FT20408F0	6			
27	REAR COVER		3Y5858M01	1			
28	TRUSS HEAD TAPPING SCREW T2		FT20408M0	6			
29	CONNECTOR		P00245-02	1			
30	POWER CORD	CONT Plug	P00240-01	1			
31	COVER - CONNECTOR	ACCESSORIES NO.4	2X0271P01	1			
32	LABEL - GROUND (B)		450452-02	1			
33	CAUTION - LABEL		452552-01	1			
34	TOOTH WASHER		FWTB04S0	2			
35	EMBLEM	(HE)	340842-01	1			
	EMBLEM-GRAM	(GRAM)	4Y6123L01	1			

B. REFRIGERATION ASSY

(B−1) and later

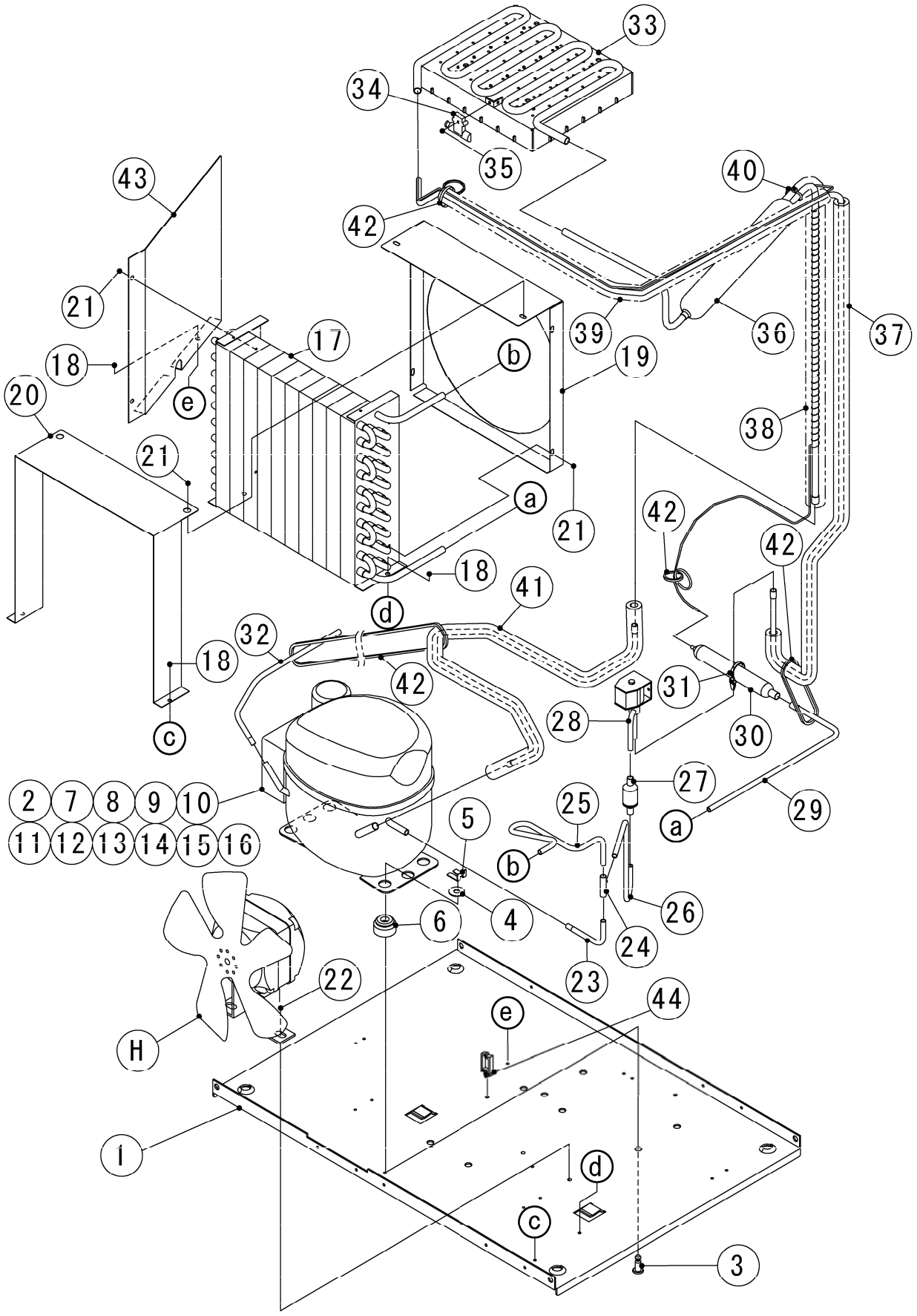

HE,GRAM

MODEL: **IM-65NE**
IM-65NE-25

TITLE:**B.REFRIGERATION ASSY**

(1/2)

INDEX NO.	DESCRIPTION	MATERIAL OR MODEL NUMBER	PART NUMBER	REQ'D NUMBER			
				B-1			
H	FAN MOTOR ASSY		3Y5886A01	1			
1	BASE		1H4829M01	1			
2	COMPRESSOR		P02582-01	1			
3	PIN		P02605-01	4			
4	WASHER		P02606-01	4			
5	CLAMP		P02607-01	4			
6	RUBBER GROMMET		P02608-01	4			
7	TERMINAL COVER		P02609-01	1			
8	SCREW		P00840-01	2			
9	BRACKET FOR CAPACITOR		P02610-01	1			
10	START CAPACITOR		P02611-01	1			
11	TERMINAL BOARD		P02612-01	1			
12	STARTING RELAY		P02622-01	1			
13	MOTOR PROTECTOR		P02621-01	1			
14	PROTECTOR RETAINER		P00839-01	1			
15	SELF TAPPING SCREW M4-11		P02615-01	1			
16	SELF TAPPING SCRW M4-21		P02616-01	1			
17	CONDENSER - AIR COOLED		P02263-01	1			
18	FLANGE BOLT (S-TITE)		FTR0408M0	5			
19	SHROUD		3Y5883M01	1			
20	COVER - CONDENSER		3Y5890M01	1			
21	TRUSS HEAD TAPPING SCREW T2		FT20408F0	6			
22	HEX HEAD BOLT (SPRING WASHER AND FLAT WASHER)		FBK0612F0	2			
23	PIPE(A) - HIGH SIDE		4Y7160M01	1			
24	TEE		417394-01	1			
25	PIPE(B) - HIGH SIDE		4Y7161M01	1			
26	PIPE(A) - HOT		4Y7162M01	1			
27	STRAINER		P00008-01	1			
28	HOT GAS VALVE		P02539-01	1			
29	PIPE(C) - HIGH SIDE		4Y7163M01	1			
30	DRIER		P00007-01	1			
31	PUSH MOUNT TIE		436156-01	1			
32	PROSESS PIPE		4Y7164M01	1			

HE,GRAM

MODEL: **IM-65NE**
IM-65NE-25

TITLE:**B.REFRIGERATION ASSY**

(2/2)

INDEX NO.	DESCRIPTION	MATERIAL OR MODEL NUMBER	PART NUMBER	REQ'D NUMBER			
				B-1			
33	EVAPORATOR	(IM-65NE)	3H6803G02	1			
		(IM-65NE-25)	3H4407G01	1			
34	HOLDER - THERMISTOR		3H9642-01	1			
35	TRUSS HEAD TAPPING SCREW (S-TITE)		FTS0408M0	1			
36	HEAT EXCHANGER		3Y5888G01	1			
37	PIPE(B) - HOT		3Y5889G01	1			
38	INSULATION TUBE		H81525550	1			
39	INSULATION TUBE		H81020730	1			
40	NYLON TIE	CV-100	7920-0002	1			
41	PIPE(A) - LOW SIDE		3Y5607G01	1			
42	NYLON TIE	CV-100	7920-0002	4			
43	BARRIER		3Y6237M01	1			
44	WIRE SADDLE		428060-03	1			

C. ICE MAKING MACHANISM ASSY (B−1) and later

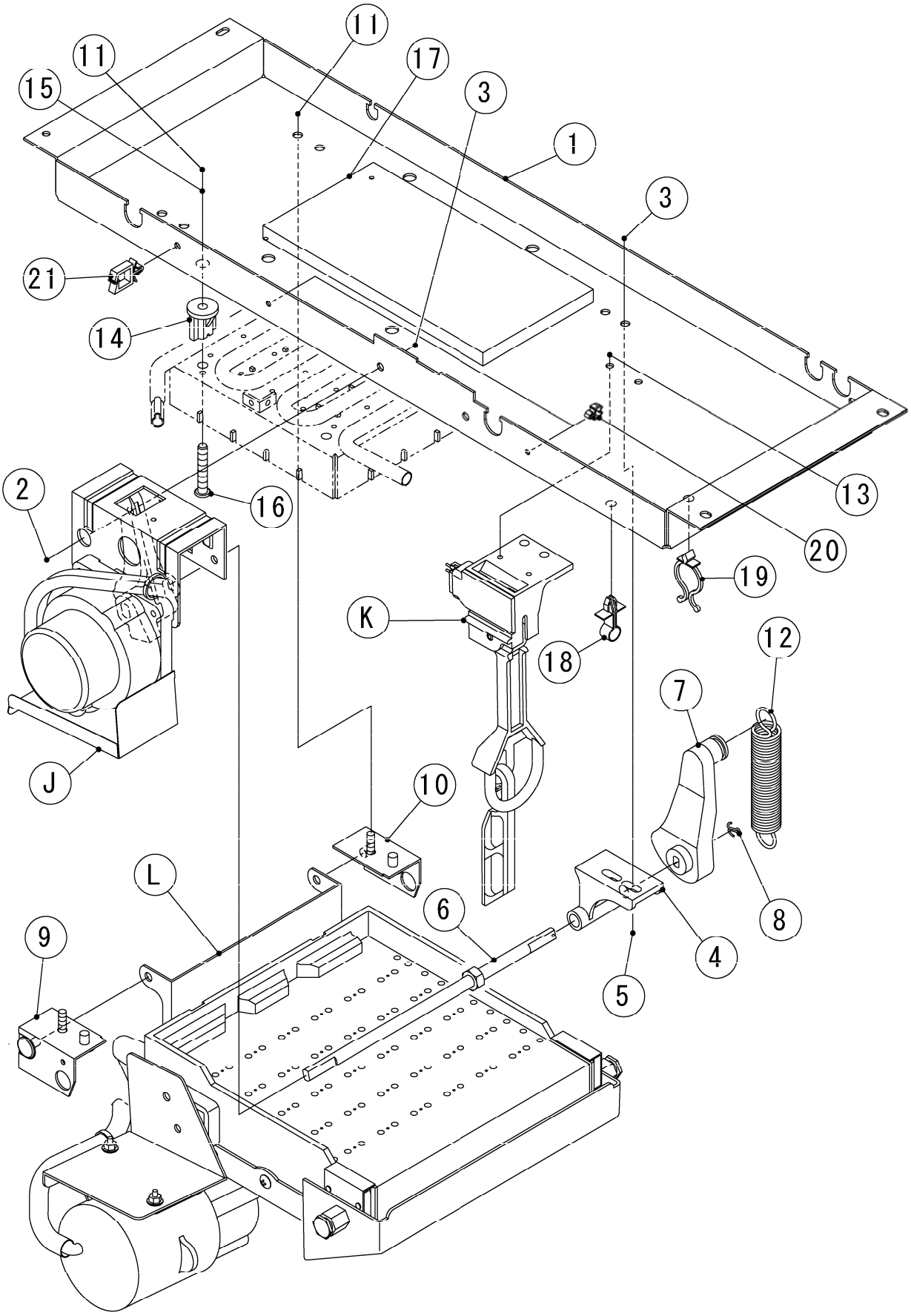

HE,GRAM

MODEL: **IM-65NE**
IM-65NE-25

TITLE:**C.ICE MAKING MECHANISM ASSY**
(1/1)

INDEX NO.	DESCRIPTION	MATERIAL OR MODEL NUMBER	PART NUMBER	REQ'D NUMBER			
				B-1			
J	ACTUATOR MOTOR ASSY		3Y5641A02	1			
K	BIN CONTROL SWITCH		3H1537A02	1			
L	WATER PAN ASSY	(IM-65NE)	2X0656A01	1			
		(IM-65NE-25)	2X0656001	1			
1	BRACKET - ICE MAKING MECHANISM	(IM-65NE)	2X0657M01	1			
		(IM-65NE-25)	2X0911M01	1			
2	TRUSS HEAD MACHINE SCREW		FST0512S0	2			
3	FLANGE NUT		FNHF05S0	4			
4	CAM SHAFT BEARING		307256-01	1			
5	TRUSS HEAD MACHINE SCREW		FST0516S0	2			
6	CAM SHAFT		4H2589G01	1			
7	CAM (B)		3H1389-01	1			
8	COTTER PIN		711S-0212	1			
9	BEARING (FRONT) - WATER PAN		4H2591G02	1			
10	BEARING (REAR) - WATER PAN		4H2592G02	1			
11	FLANGE NUT		FNHF06S0	6			
12	SPRING		4H2590-01	1			
13	TRUSS HEAD TAPPING SCREW T2		FT20410M0	2			
14	SPACER	(IM-65NE)	4H0471-01	4			
		(IM-65NE-25)	4X5342-01	4			
15	WASHER		4H0777-01	4			
16	SCREW EVAPORATOR	(IM-65NE)	4Y4922M01	4			
		(IM-65NE-25)	4Y4922M02	4			
17	INSULATION (D)		4Y7347P01	1			
18	CLAMP		428644-02	1			
19	CLAMP	No.2674	427902-02	1			
20	CLAMP		426197-01	2			
21	WIRE SADDLE		428060-03	1			

D. WATER CIRCUIT ASSY

(B−1) and later

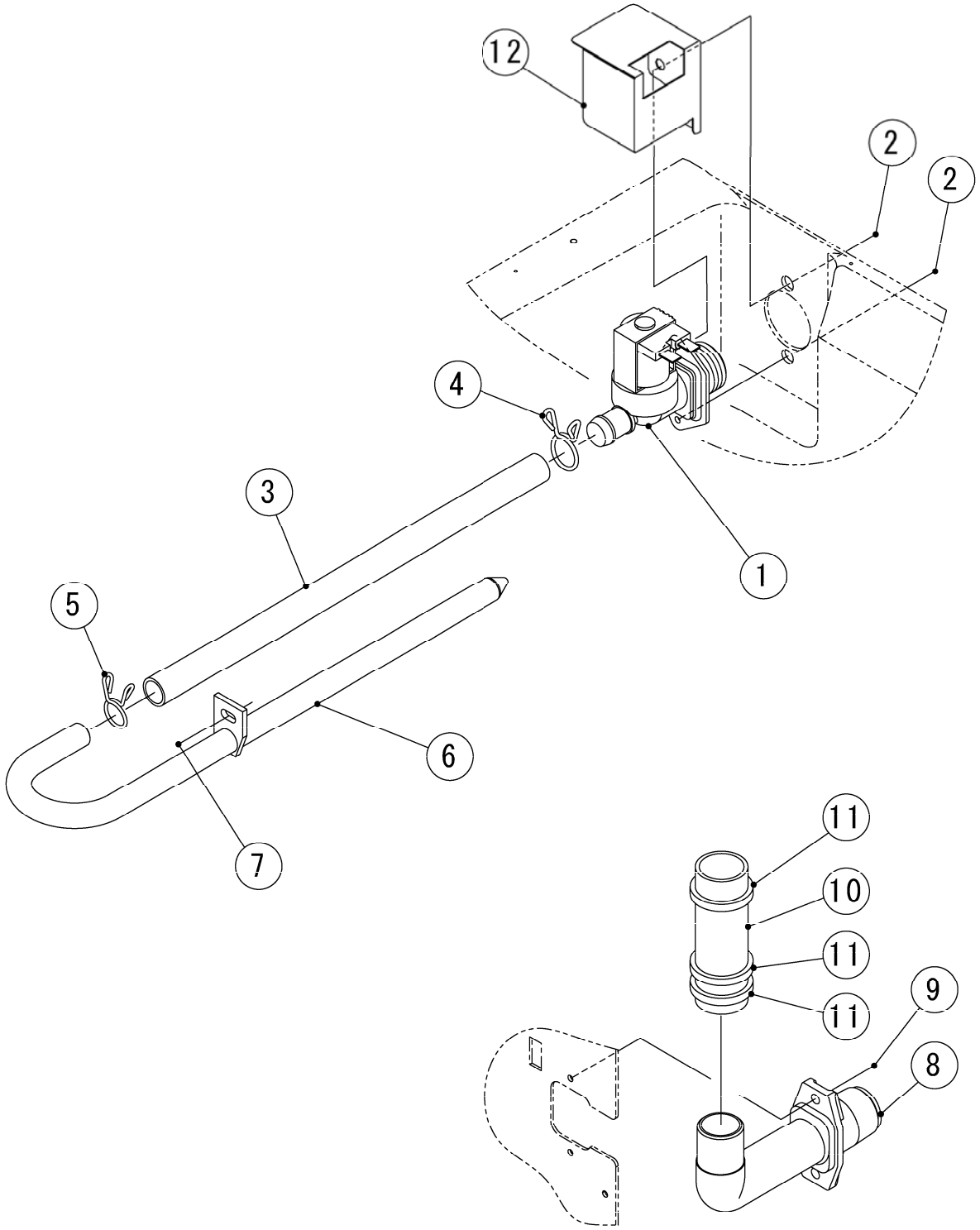

HE,GRAM

MODEL: **IM-65NE**
IM-65NE-25

TITLE:**D.WATER CIRCUIT ASSY**

(1/1)

INDEX NO.	DESCRIPTION	MATERIAL OR MODEL NUMBER	PART NUMBER	REQ'D NUMBER			
				B-1			
1	WATER VALVE		P02056-01	1			
2	HEX SOCKET HEAD CAP SCREW		FBX0408S0	2			
3	SILICONE HOSE		3H9589-03	1			
4	HOSE CLAMP		435934-03	1			
5	HOSE CLAMP		435934-02	1			
6	WATER SUPPLY PIPE		3H9530G01	1			
7	TRUSS HEAD MACHINE SCREW		FST0408S0	1			
8	DRAIN PIPE		3H0394-01	1			
9	TRUSS HEAD TAPPING SCREW T2		FT20408S0	2			
10	VINYL HOSE		3Y5610Z01	1			
11	TIE	CV-150	7920-0003	3			
12	COVER-WATER VALVE		3Y6277M01	1			

E. CONTROL BOX ASSY

(B−1) and later

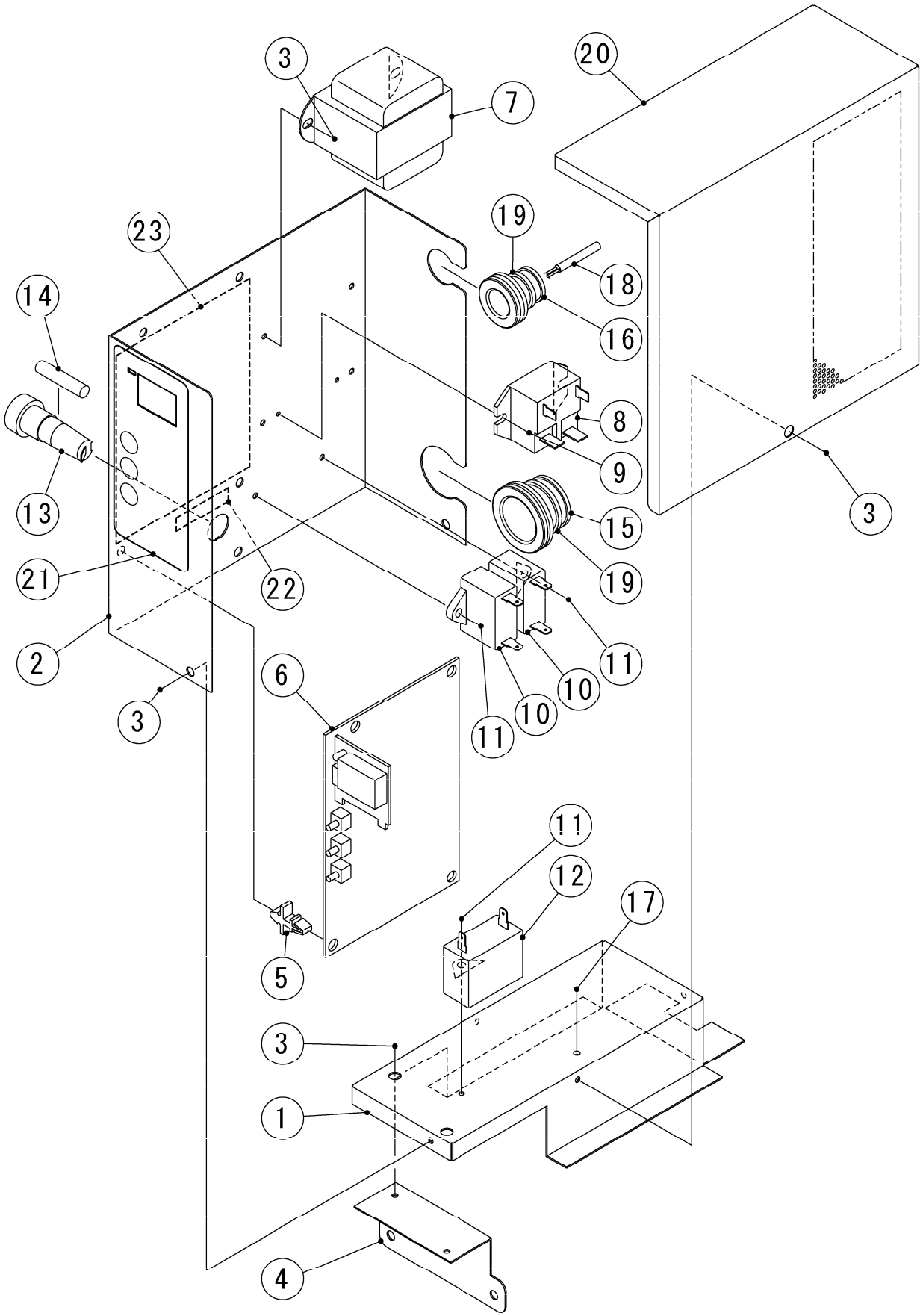

HE,GRAM

MODEL: **IM-65NE**
IM-65NE-25

TITLE:**E.CONTROL BOX ASSY**

(1/1)

INDEX NO.	DESCRIPTION	MATERIAL OR MODEL NUMBER	PART NUMBER	REQ'D NUMBER			
				B-1			
1	CONTROL BOX (A)		3Y5611M01	1			
2	CONTROL BOX(B)		2X0438M01	1			
3	TRUSS HEAD TAPPING SCREW T2		FT20408F0	8			
4	PLATE - BOX		4Y7215M01	1			
5	BOARD SUPPORT		414929-02	4			
6	CONTROLLER BOARD		P01873-01	1			
7	TRANSFORMER		P00012-01	1			
8	POWER RELAY		P02203-02	1			
9	TRUSS HEAD TAPPING SCREW T2		FT20308F0	2			
10	CAPACITOR		P01870-01	2			
11	TRUSS HEAD TAPPING SCREW T2		FT20410F0	3			
12	CONDENSER		P02158-01	1			
13	FUSE HOLDER		P00014-01	1			
14	FUSE		P01876-01	1			
15	GROMMET		4H2568-01	1			
16	GROMMET		4H2568-02	1			
17	TRUSS HEAD MACHINE SCREW		FST0408S0	1			
18	THERMISTOR - CUBE COTROL		P00350-03	1			
19	TIE	CV-150	7920-0003	2			
20	CONTROL BOX COVER		3Y5612M01	1			
21	CONTROL LABEL		475642L01	1			
22	LABEL - FUSE		466798-01	1			
23	WIRING LABEL		3Y5648L01	1			

F. DOOR ASSY

(B−1) and later

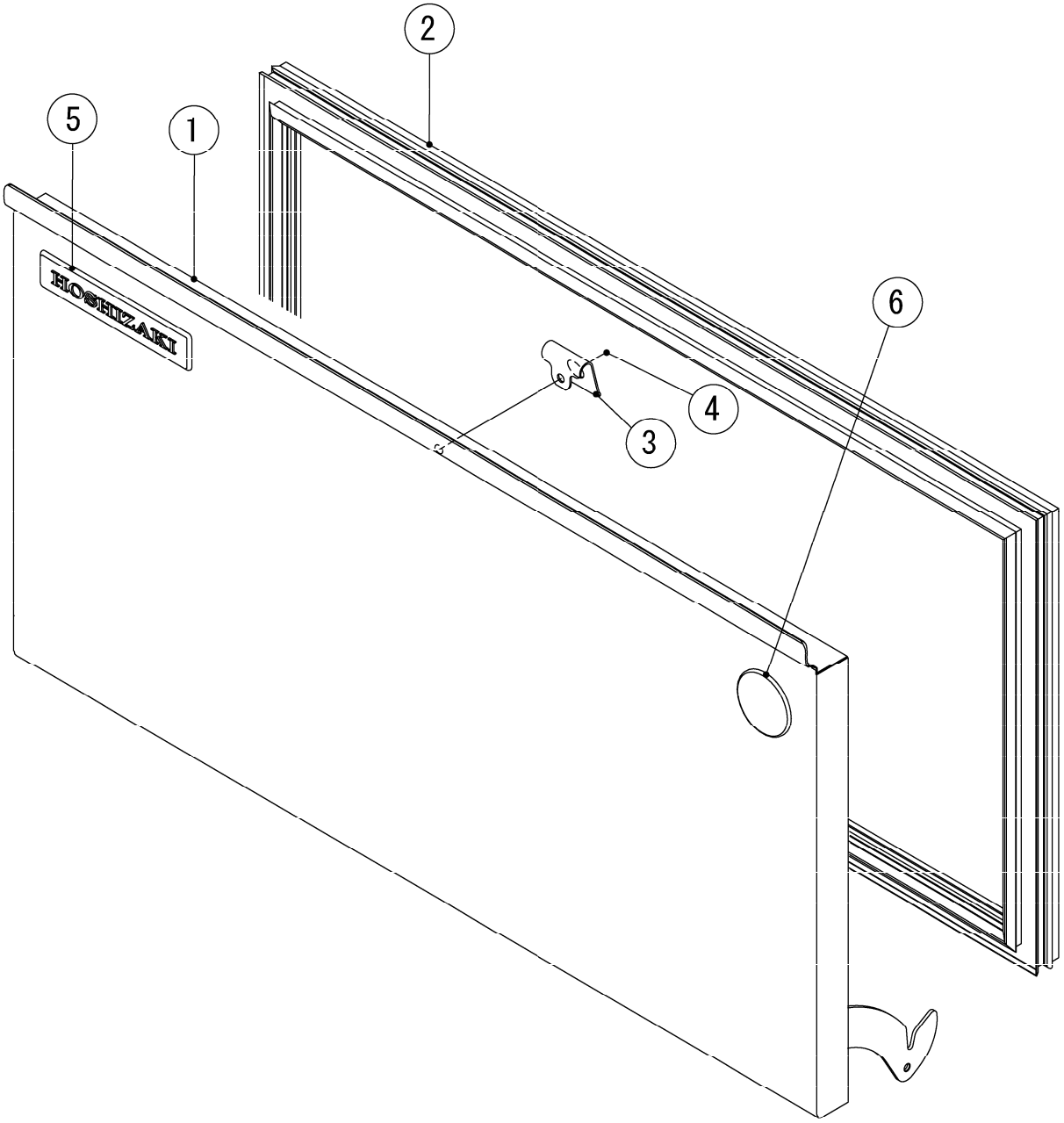

HE,GRAM

MODEL: **IM-65NE**
IM-65NE-25

TITLE:**F.DOOR ASSY**

(1/1)

INDEX NO.	DESCRIPTION	MATERIAL OR MODEL NUMBER	PART NUMBER	REQ'D NUMBER			
				B-1			
1	DOOR - INSULATION	(HE) Including No. 5,6	2X0466G02	1			
		(GRAM)	2X0466001	1			
2	DOOR GASKET		3Y6199P03	1			
3	CATCH - SLOPE		4X7644-01	1			
4	TRUSS HEAD TAPPING SCREW T2		FT20408M0	1			
5	EMBLEM	(HE)	340842-01	1			
6	LABEL - PENGUIN	(HE)	471486L01	1			

G. FRONT PANEL LOWER ASSY

(B−1) and later

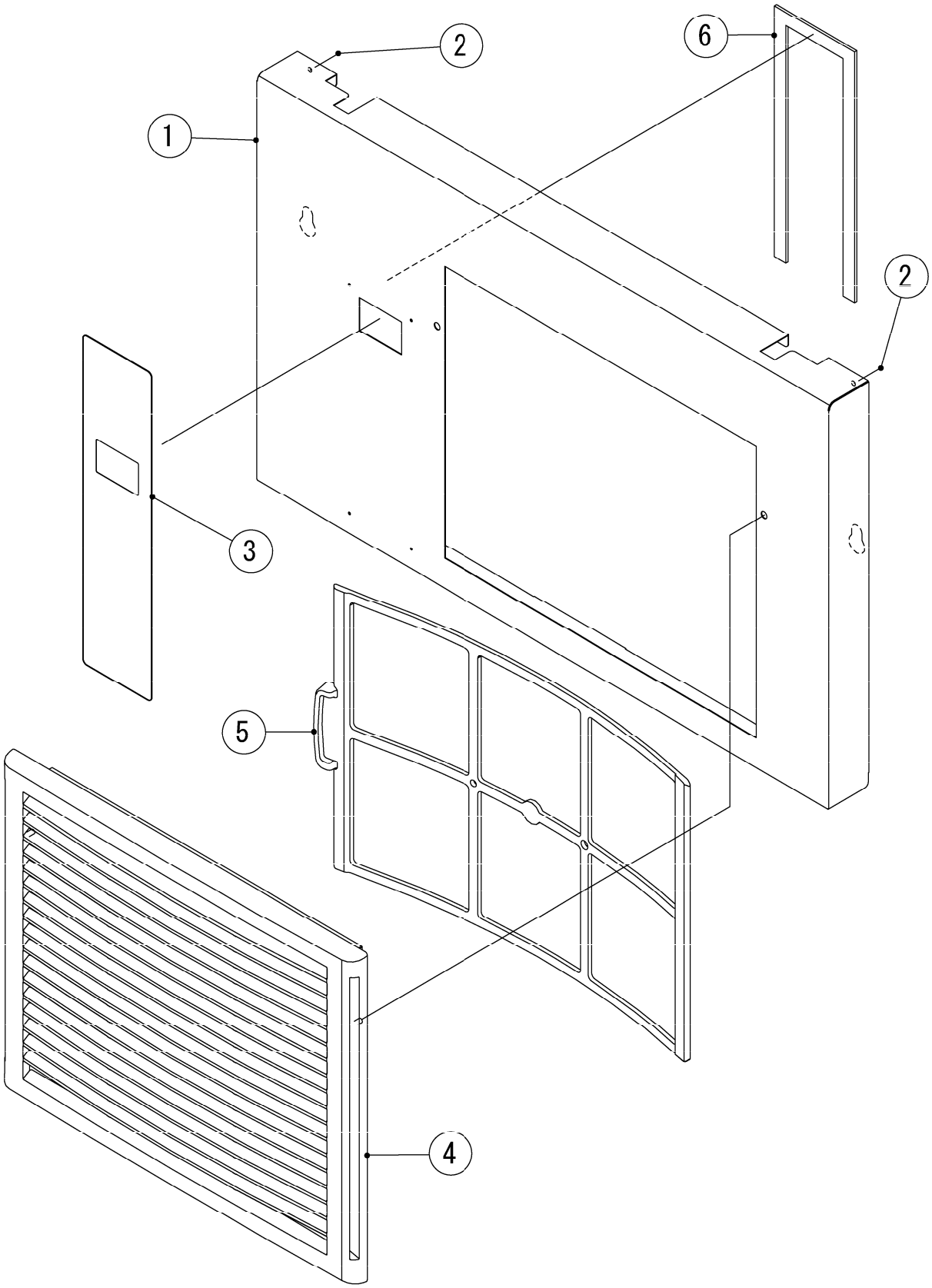

HE,GRAM

MODEL: **IM-65NE**
IM-65NE-25

TITLE:**G.FRONT PANEL LOWER ASSY**

(1/1)

INDEX NO.	DESCRIPTION	MATERIAL OR MODEL NUMBER	PART NUMBER	REQ'D NUMBER			
				B-1			
1	FRONT PANEL(LO)		2X0440M02	1			
2	RIVET	SSD42SSBS(t1.6～3.2)	7170-0002	2			
3	OPERATION LABEL		375116L03	1			
4	LOUVER		1H4811P01	1			
5	AIR FILTER		2X0416G01	1			
6	SPONGE TAPE		3Y5555Z01	1			

H. FAN MOTOR ASSY

(B−1) and later

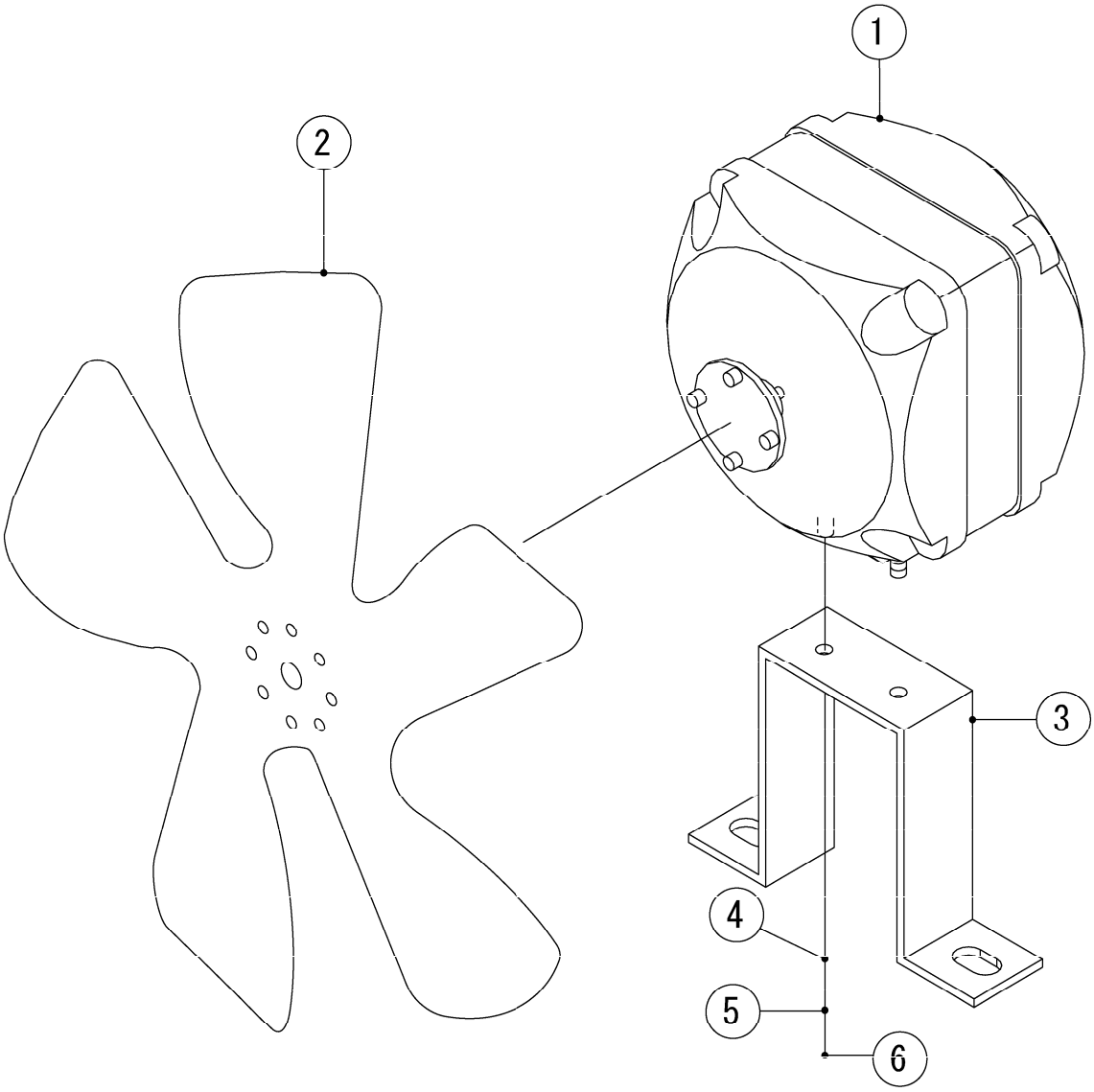

HE,GRAM

MODEL: **IM-65NE**
IM-65NE-25

TITLE:**H.FAN MOTOR ASSY**

(1/1)

INDEX NO.	DESCRIPTION	MATERIAL OR MODEL NUMBER	PART NUMBER	REQ'D NUMBER			
				B-1			
1	FAN MOTOR		P00022-01	1			
2	FAN		451771-01	1			
3	BRACKET - FM		451767-01	1			
4	FLAT WASHER		FWPL04S0	2			
5	SPRING WASHER		FWSP04S0	2			
6	NUT		FNH104S0	2			

J. ACTUATOR MOTOR ASSY

(B−1) and later

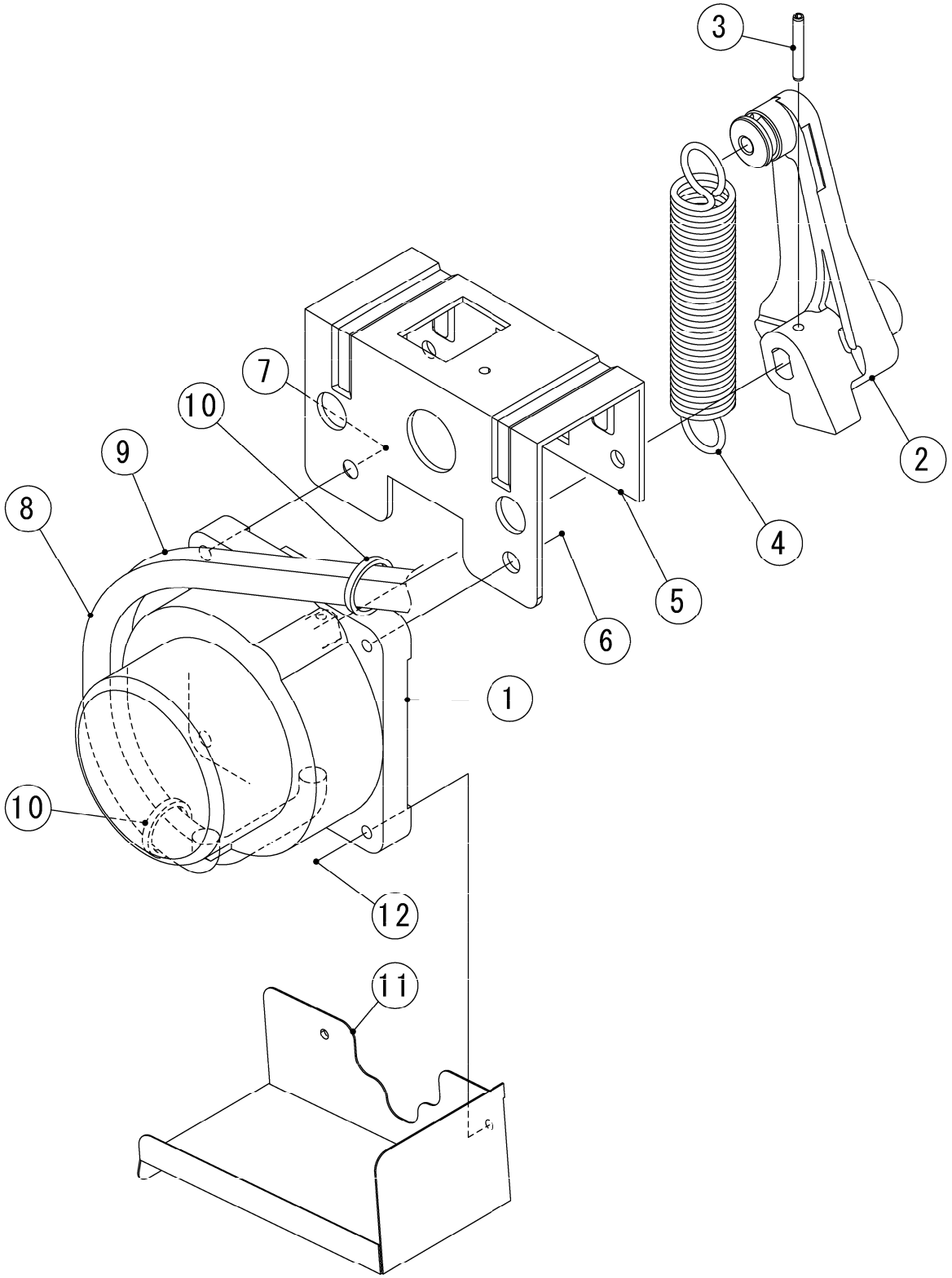

HE,GRAM

MODEL: **IM-65NE**
IM-65NE-25

TITLE:**J.ACTUATOR MOTOR ASSY**

(1/1)

INDEX NO.	DESCRIPTION	MATERIAL OR MODEL NUMBER	PART NUMBER	REQ'D NUMBER			
				B-1			
1	ACTUATOR MOTOR		P01869-01	1			
2	CAM (A)		3Y2277P01	1			
3	SPRING PIN		712S-0322	1			
4	SPRING		4H2590-01	1			
5	BRACKET - ACTUATOR MOTOR		3H1388-04	1			
6	TRUSS HEAD MACHINE SCREW		FST0612S0	1			
7	FLAT HEAD MACHINE SCREW		FSF0612S0	1			
8	TUBE - SILICONE		4Y6751Z01	1			
9	TUBE - SILICONE		4X8017-01	1			
10	TIE	CV-150	7920-0003	2			
11	COVER - AM		3Y5292M01	1			
12	HEX HEAD BOLT (SPRING WASHER AND FLAT WASHER)		FBK0416S0	2			

K. BIN CONTROL SWITCH

(B−1) and later

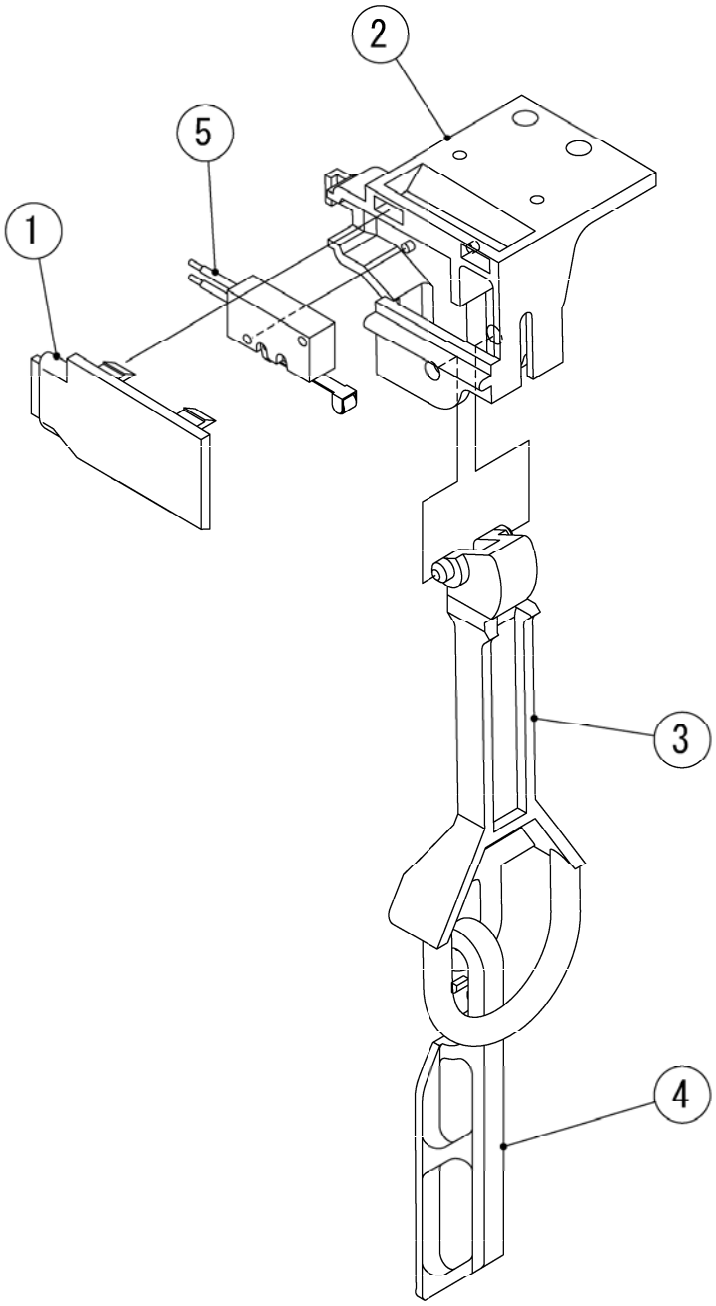

HE,GRAM

MODEL: **IM-65NE**
IM-65NE-25

TITLE:**K.BIN CONTROL SWITCH**

(1/1)

INDEX NO.	DESCRIPTION	MATERIAL OR MODEL NUMBER	PART NUMBER	REQ'D NUMBER			
				B-1			
1	SWITCH BOX COVER		4H8785-01	1			
2	SWICH BOX		2H2043-01	1			
3	SWITCH ACTUATOR		3H1369-01	1			
4	DETECTOR		3H0633-01	1			
5	MICRO SWITCH		456432-02	1			

L. WATER PAN ASSY

(B−1) and later

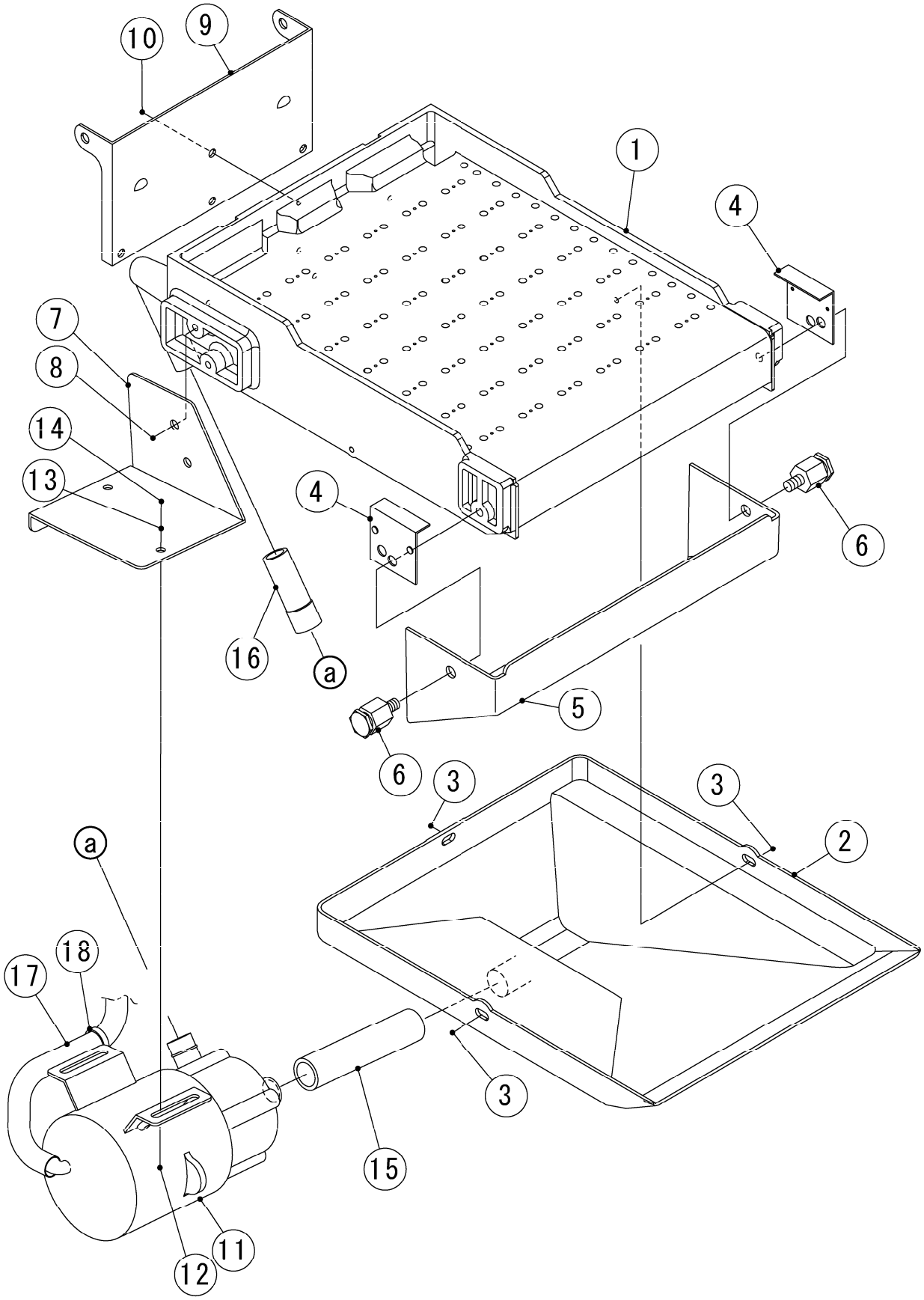

HE,GRAM

MODEL: **IM-65NE**
IM-65NE-25

TITLE:**L.WATER PAN ASSY**

(1/1)

INDEX NO.	DESCRIPTION	MATERIAL OR MODEL NUMBER	PART NUMBER	REQ'D NUMBER			
				B-1			
1	WATER PLATE	(IM-65NE)	2H0598G02	1			
		(IM-65NE-25)	2H0598G03	1			
2	WATER TANK		2H1459-02	1			
3	TRUSS HEAD TAPPING SCREW T2		FT20408M0	3			
4	PLATE - LUBRICATION		4H0448-01	2			
5	DRAIN GUIDE		3H5521-01	1			
6	SCREW SPRING HOOK		4H2582G01	2			
7	BRACKET - PUMP MOTOR		4Y7294M01	1			
8	TRUSS HEAD TAPPING SCREW T2		FT20512M0	2			
9	BRACKET - WATER PAN		4H2643-02	1			
10	TRUSS HEAD TAPPING SCREW T2		FT20412M0	4			
11	PUMP MOTOR		P02132-01	1			
12	HEX HEAD BOLT		FBH0412S0	2			
13	FLAT WASHER		FWPL04S0	2			
14	FLANGE NUT		FNHF04S0	2			
15	SUCTION TUBING		4H1922-02	1			
16	DISCHARGE TUBING		4H1982-01	1			
17	TUBE - SILICONE		4Y6751Z03	1			
18	TIE	CV-150	7920-0003	1			

M. ACCESSORIES

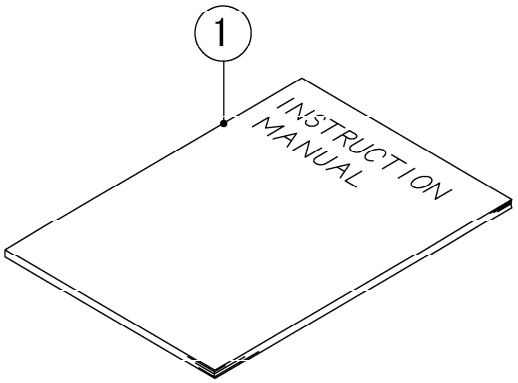

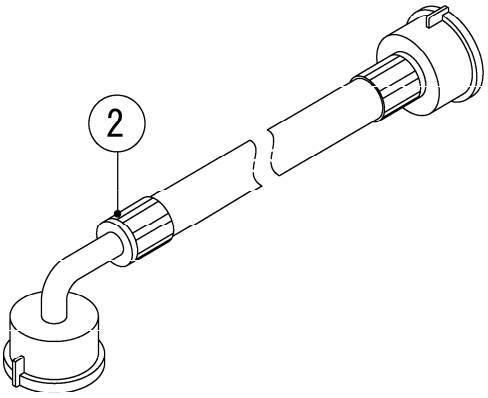

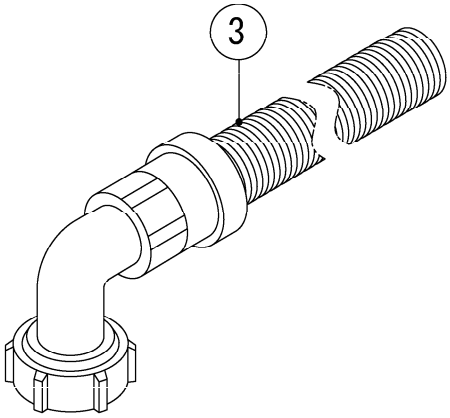

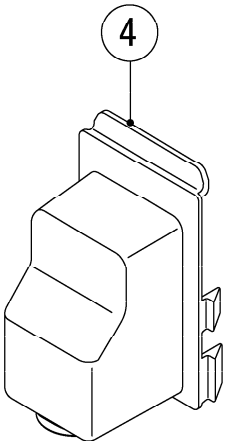

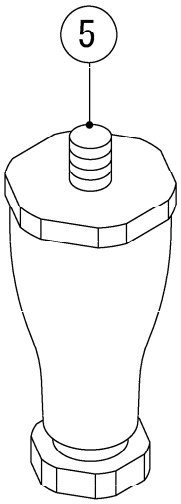

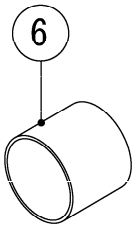

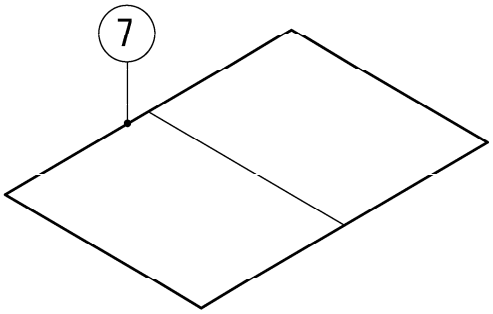

HE,GRAM

MODEL: **IM-65NE**
IM-65NE-25

TITLE:**M.ACCESSORIES**

(1/1)

INDEX NO.	DESCRIPTION	MATERIAL OR MODEL NUMBER	PART NUMBER	REQ'D NUMBER			
				B-1			
1	INSTRUCTION MANUAL		L1E1EC201	1			
2	INLET HOSE		450722-01	1			
3	OUTLET HOSE		452365-01	1			
4	COVER - CONNECTOR		2X0271P01	1			
5	LEG		462576-02	4			
6	CAP		417323-01	1			
7	INSTRUCTION SHEET		121594L01	1			