No.	L013-3715
ISSUED:	Jnu. 11, 2012
REVISED:	Jan. 23, 2013

HOSHIZAKI
CUBELET ICE DISPENSER

MODEL DCM-60KE(-P)

(L013, L013-C101, L013-C201,
L013-C301, L013-C130,
L014, L014-C101, L014-C201,
L014-C301, L014-C130)

PARTS LIST
(GENERAL)

B-1 JUN. 2012
B-2 OCT. 2012
B-3 OCT. 2012

List of Specifications

DCM-60KE	L013	CONTINENTAL	50Hz
	L013-C101	UK	50Hz
	L013-C201	OCEANIA	50Hz
	L013-C301	CHINA	50Hz
	L013-C130	MIDDLE EAST	60Hz
DCM-60KE-P	L014	CONTINENTAL	50Hz
	L014-C101	UK	50Hz
	L014-C201	OCEANIA	50Hz
	L014-C301	CHINA	50Hz
	L014-C130	MIDDLE EAST	60Hz

Auxiliary Codes

Auxiliary Code Breakdown

The auxiliary code is the first two characters in the serial number. The first character indicates the year. Years progress or regress in alphabetical order. The series runs from "A" through "V" and the letters "I" and "O" are skipped. The second character indicates significant part changes within a year. Base is "0" and this number advances for each change. In cases where there is a letter in parentheses, this designates the month. This is the last character in the serial number. The series runs from "(A)" through "(M)" and the letter "(I)" is skipped. This designation is only included when identifying a parts change within an auxiliary code.

Note About Ordering Parts

Most assemblies cannot be ordered as complete units; parts in the assemblies generally must be ordered separately.

MARKS LOCATED UNDER THE AUXILIARY CODE

- = Part deleted.
x = Part deleted and replaced by "o" part.
o = New part in place of "x" part.

FASTENER PART NUMBER

SCREWS

F S T 0 3 0 6 F 0

- 0 — Special treatment (0 - 9)
- F — Material *1
- 06 — Length (mm)
- 03 — Nominal diameter (mm)
- T — Description *2
- F — Fastener

NUTS & WASHERS

F W S P 0 5 S 0

- 0 — Special treatment (0 - 9)
- S — Material *1
- 05 — Nominal diameter (mm)
- P — Description *2
- F — Fastener

*1 Material

F: Steel
S: Austenitic stainless steel
M: Martensitic stainless steel
B: Copper alloy
P: Polycarbonate
N: Polyamide
V: PVC
A: ABS
X: Polyacetal
L: Aluminum

*2 Description

First letter
S: Machine screw
T: Tapping screw
M: Wood screw
B: Bolt
W: Washer
N: Nut

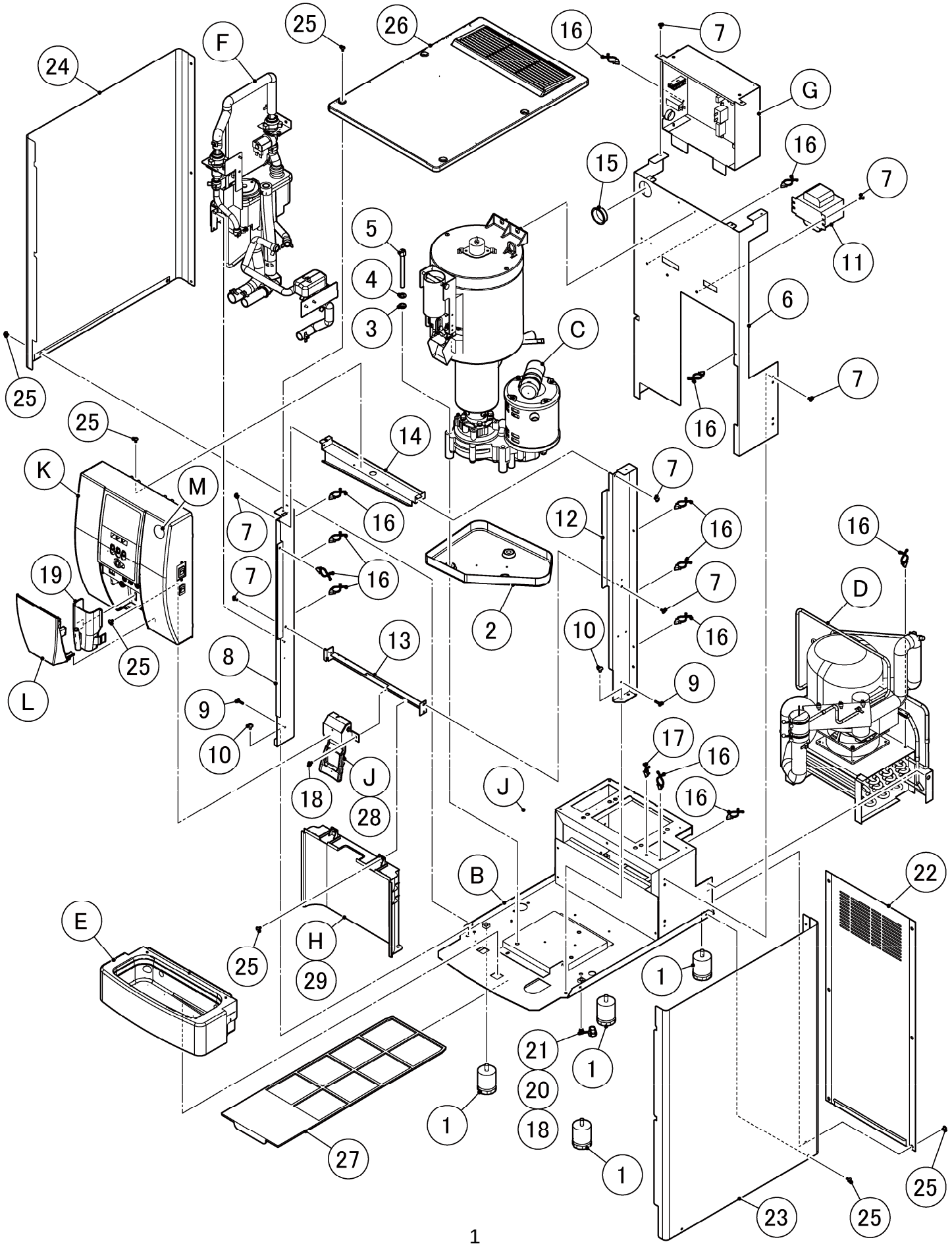
24
F
25
26
16
7
G
15
16
7
11
5
4
3
C
6
7
16
25
25
K
M
14
7
16
12
16
16
7
19
7
16
7
D
2
10
16
25
13
8
9
L
9
10
17
16
18
J
28
J
16
B
22
E
H
25
29
1
21
1
20
1
18
1
27
25
23
25

GENERAL

MODEL: **DCM-60KE(-P)** TITLE: **A. ICE CUBER ASSY**

INDEX NO.	DESCRIPTION	MATERIAL OR MODEL NUMBER	PART NUMBER	REQ'D NUMBER			
				B-1	B-2	B-3	
B	BASE ASSY		376453A01	1	-		
			377813A01		1	1	
C	ICE MAKING UNIT		262218A01	1	1	1	
D	REFRIGERATION CIRCUIT		121902A01	1	1	1	
		MIDDLE EAST	121902001	1	1	1	
E	DRAIN PANEL ASSY		374966A01	1	1	1	
F	WATER CIRCUIT		121904A01	1	1	1	
G	CONTROL BOX ASSY		262214A03	1	1	1	
		DCM-60KE-P	262214A04	1	1	1	
H	FRONT PANEL ASSY - 60LO	DCM-60KE	374977A01	1	1	1	
J	LEVER - UNIT	DCM-60KE	262217A01	1	1	1	
K	FRONT PANEL (UP)		121905A01	1	1	1	
L	FRONT COVER		374962A01	1	1	1	
M	LABEL LOCATION		122030A01	1	1	1	
		DCM-60KE MIDDLE EAST	122030001	1	1	1	
		DCM-60KE-P	122030A02	1	1	1	
		DCM-60KE-P MIDDLE EAST	122030002	1	1	1	
T	ACCESSORIES		A02554-01	1	1	1	
		CHINA	A02554001	1	1	1	
1	LEG		458051-02	4	4	4	
2	DRAIN PAN - GM		259846P01	1	1	1	
3	SEAL WASHER		458299-01	3	3	3	
4	SPRING WASHER		FWSP08S0	3	3	3	
5	SCREW - M8		458298-02	3	3	3	
6	PLATE		121903M01	1	-		
			122416M01		1	1	
7	TRUSS HEAD SCREW		FST0408F0	14	15	15	

GENERAL

MODEL: **DCM-60KE(-P)** TITLE: **A. ICE CUBER ASSY**

INDEX NO.	DESCRIPTION	MATERIAL OR MODEL NUMBER	PART NUMBER	REQ'D NUMBER			
				B-1	B-2	B-3	
8	FRAME (L)		262222M01	1	-		
			264000M01		1	1	
9	TRUSS HEAD TAPPING SCREW T1		FT10416F0	2	-		
	TRUSS HEAD TAPPING SCREW T2		FT20416F0		2	2	
10	TRUSS HEAD SCREW		FST0508F0	4	4	4	
11	TRANSEFOMER		P02552-01	1	1	1	
12	FRAME (R)		263225M01	1	-		
			263999M01		1	1	
13	CENTER FRAME		376454M01	1	-		
			377811M01		1	1	
14	TOP FRAME		376455M01	1	1	1	
15	BUSHING		420470-06	1	1	1	
16	WIRE RETAINER	No.4253	427902-05	14	14	14	
17	CLAMP	No.248	427902-04	2	2	2	
18	PAN HEAD SCREW SW		FSK0408S0	3	3	3	
19	SPOUT		259891P01	1	1	1	
20	POWER CORD	CONT Plug	P02697-01	1	1	1	
		UK & MIDDLE EAST	P02698-01	1	1	1	
		OCEANIA	P02760-01	1	1	1	
	POWER SUPPLY CORD	CHINA	P00193-01	1	1	1	
21	BUSHING		448949-01	1	1		
22	REAR PANEL		121906M01	1	1		
23	SIDE PANEL (R)		121907M01	1	1		
24	SIDE PANEL (L)		121908M01	1	1		
25	TRUSS HEAD SCREW P		FSG0408S0	19	19		
26	TOP PANEL - 115		121228P01	1	1		
27	AIR FILTER		341489G01	1	1		
28	BRACKET - BOTTON	DCM-60KE-P	376725M01	1	1		
29	FRONT PANEL (L01) - 60AD	DCM-60KE-P	376810G01	1	1		

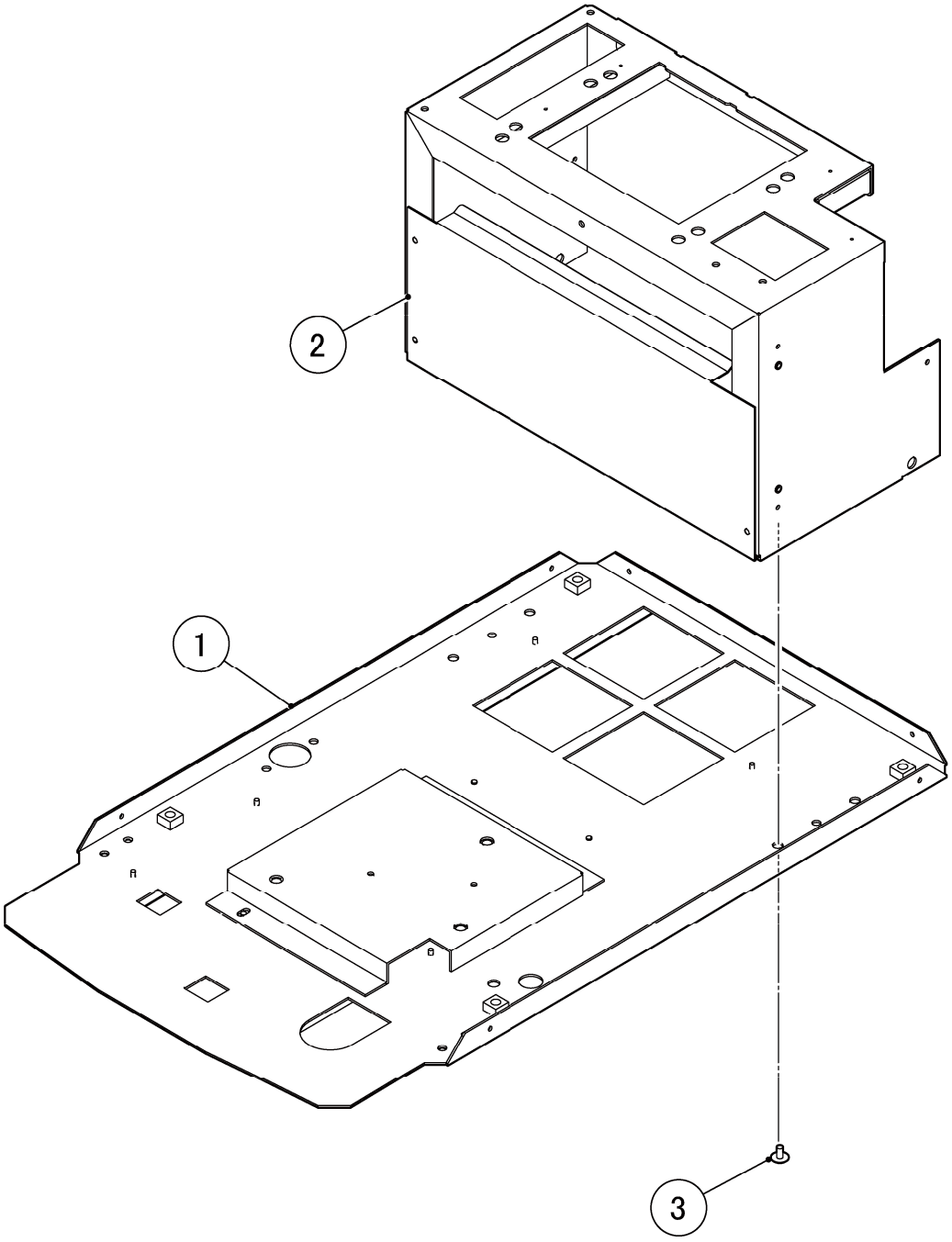
2
1
3

GENERAL

MODEL: **DCM-60KE(-P)** TITLE: **B. BASE ASSY**

INDEX NO.	DESCRIPTION	MATERIAL OR MODEL NUMBER	PART NUMBER	REQ'D NUMBER			
				B-1	B-2	B-3	
1	BASE - SP		262216G01	1	-		
			264217G01		1	1	
2	COMPRESSOR BRACKET		376440G01	1	1	1	
3	TRUSS HEAD SCREW		FST0508F0	4	4	4	

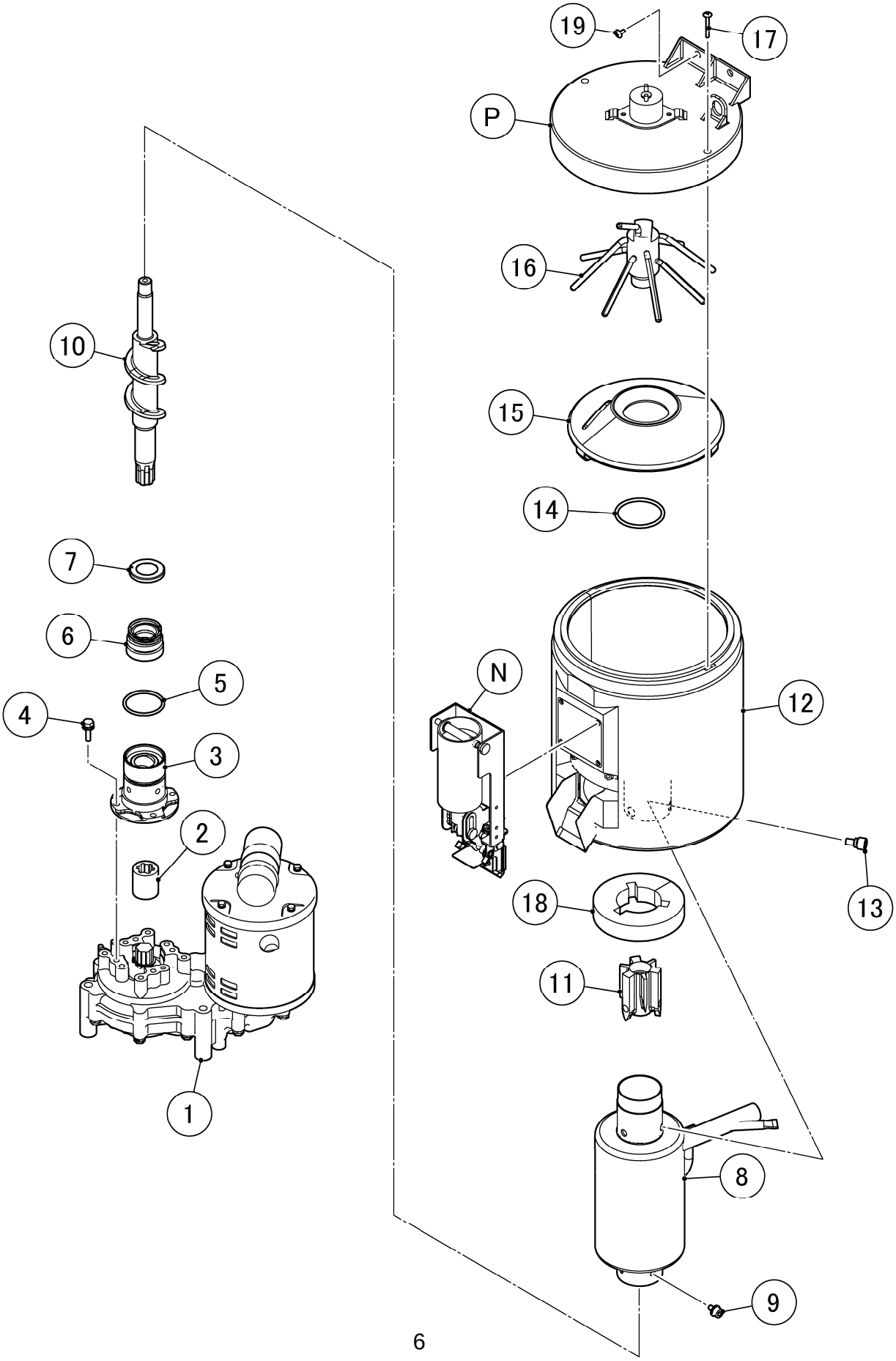
19
17
P
16
10
15
14
7
6
5
N
12
4
3
2
13
18
11
1
8
9

GENERAL

MODEL: **DCM-60KE(-P)** TITLE: **C. ICE MAKING UNIT**

INDEX NO.	DESCRIPTION	MATERIAL OR MODEL NUMBER	PART NUMBER	REQ'D NUMBER			
				B-1	B-2	B-3	
N	SHUTTER ASSY		121220A03	1	1	1	
P	COVER - BIN ASSY		217866A01	1	1	1	
1	GEARMOTOR		P02068-02	1	1	1	
2	COUPLING - SPLINE		418316-01	1	1	1	
3	HOUSING		206013G05	1	1	1	
4	BOLT		458660-01	4	4	4	
5	O-RING		7616-G040	1	1	1	
6	MECHANICAL SEAL		432491-01	1	1	1	
7	RING		432494-01	1	1	1	
8	EVAPORATOR (AD)		374941G02	1	1	1	
9	SCREW		P01718-01	4	4	4	
10	AUGER		361012G01	1	1	1	
11	EXTRUDING HEAD 45C		327236002	1	1	1	
12	STORAGE BIN		264176G01	1	1	1	
13	SEAL BOLT - M8		P01768-02	3	3	3	
14	O-RING		7616-P048	1	1	1	
15	DRIP RING		317685-02	1	1	1	
16	AGITATOR		348966G01	1	1	1	
17	TRUSS HEAD SCREW		FST0430S0	2	2	2	
18	COVER - CASING		471716P01	1	1	1	
19	TRUSS HEAD SCREW		FST0408S0	2	2	2	

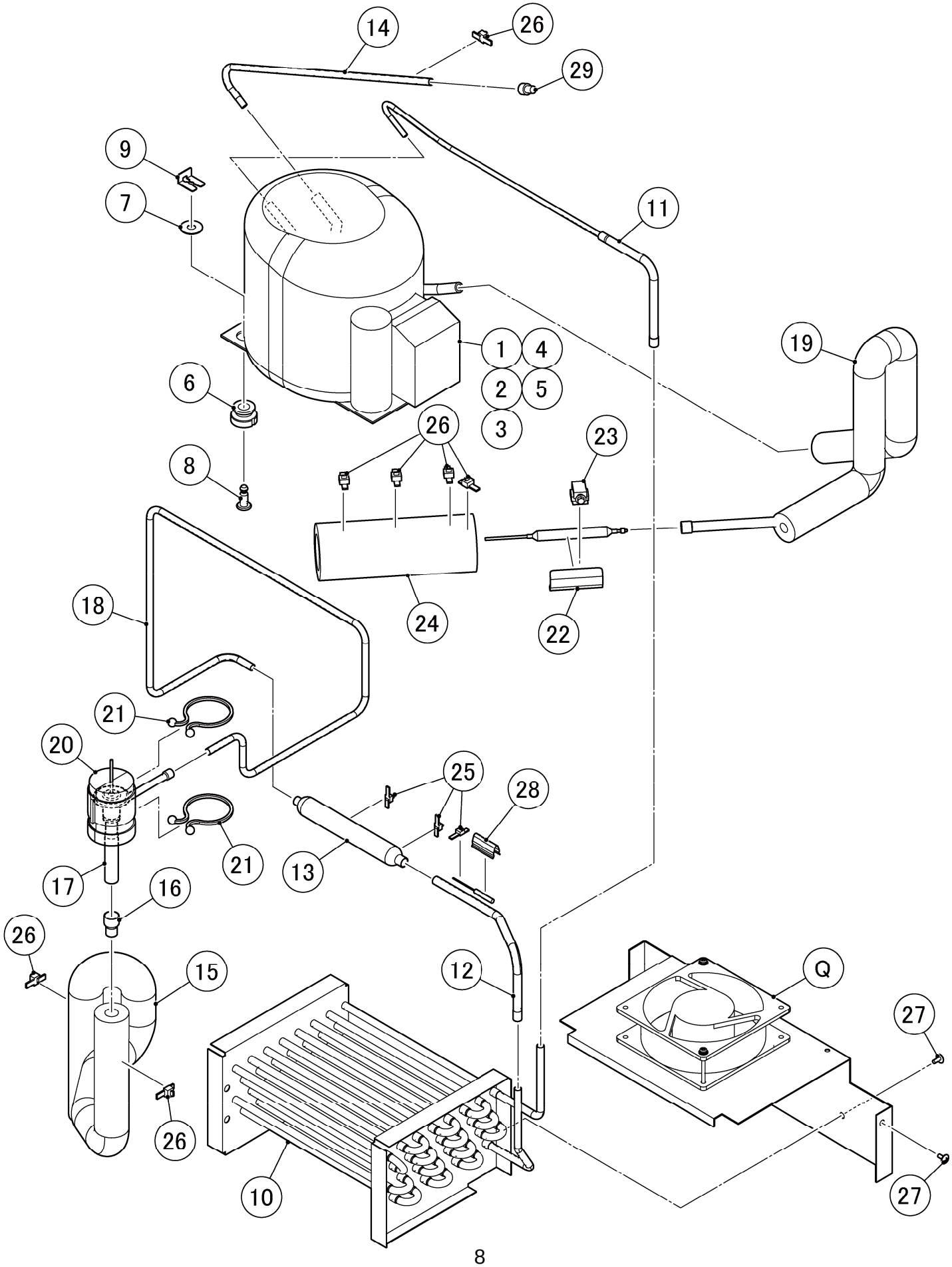
14
26
29
9
7
11
1
4
2
5
3
19
6
26
23
8
18
24
22
21
20
25
28
21
13
17
16
26
15
12
Q
27
26
10
27

GENERAL

MODEL: **DCM-60KE(-P)**

TITLE: **D. REFRIGERATION CIRCUIT**

INDEX NO.	DESCRIPTION	MATERIAL OR MODEL NUMBER	PART NUMBER	REQ'D NUMBER			
				B-1	B-2	B-3	
Q	FAN MOTOR ASSY		376463A01	1	1	1	
1	COMPRESSOR		450900-01	1	1	1	
		MIDDLE EAST	P01902-01	1	1	1	
2	STARTING RELAY		451264-01	1	1	1	
		MIDDLE EAST	P01903-01	1	1	1	
3	COVER		450896-01	1	1	1	
4	CORD RELIEF		450899-01	1	1	1	
5	START CAPACITOR		452765-01	1	1	1	
6	GROMMET		450897-01	4	4	4	
7	WASHER CUSHION		P02793-01	4	4	4	
8	STEEL PIN		452255-01	4	4	4	
9	CLIP		452256-01	4	4	4	
10	CONDENSER		P02162-01	1	1	1	
11	COPPER TUBE - DISCHARGE		262219G01	1	1	1	
12	COPPER TUBE - LIQUID		476729M01	1	1	1	
13	DRIER		P00026-01	1	1	1	
14	COPPER TUBE (A) - ACCESS		376460M01	1	1	1	
15	COPPER TUBE - EVA INLET		377167G01	1	1	1	
16	REDUCER		421904-01	1	1	1	
17	EXPANSION VALVE		446808-01	1	1	1	
18	COPPER TUBE (A)		263242M01	1	1	1	
19	COPPER TUBE (B)		376462G01	1	1	1	
20	VALVE COVER		3Y3196P01	1	1	1	
21	CLAMP		P00752-01	2	2	2	
22	HOLDER - EXPV		451267-01	1	1	1	
23	CLAMP		443461-01	1	1	1	
24	Insulation Tube		H73555B15	1	1	1	
25	TIE	CV-150	7920-0003	3	3	3	

GENERAL

MODEL: **DCM-60KE(-P)**			TITLE: **D. REFRIGERATION CIRCUIT**				
INDEX NO.	DESCRIPTION	MATERIAL OR MODEL NUMBER	PART NUMBER	REQ'D NUMBER			
				B-1	B-2	B-3	
26	NYLON TIE	CV-250	7920-0011	7	7	7	
27	T2 TRUSS HEAD SCREW		FT20408F0	4	4	4	
28	THERMISTOR - HOLDER		458132-01	1	1	1	
29	LOCKRING STOPPER		P01677-01	1	1	1	

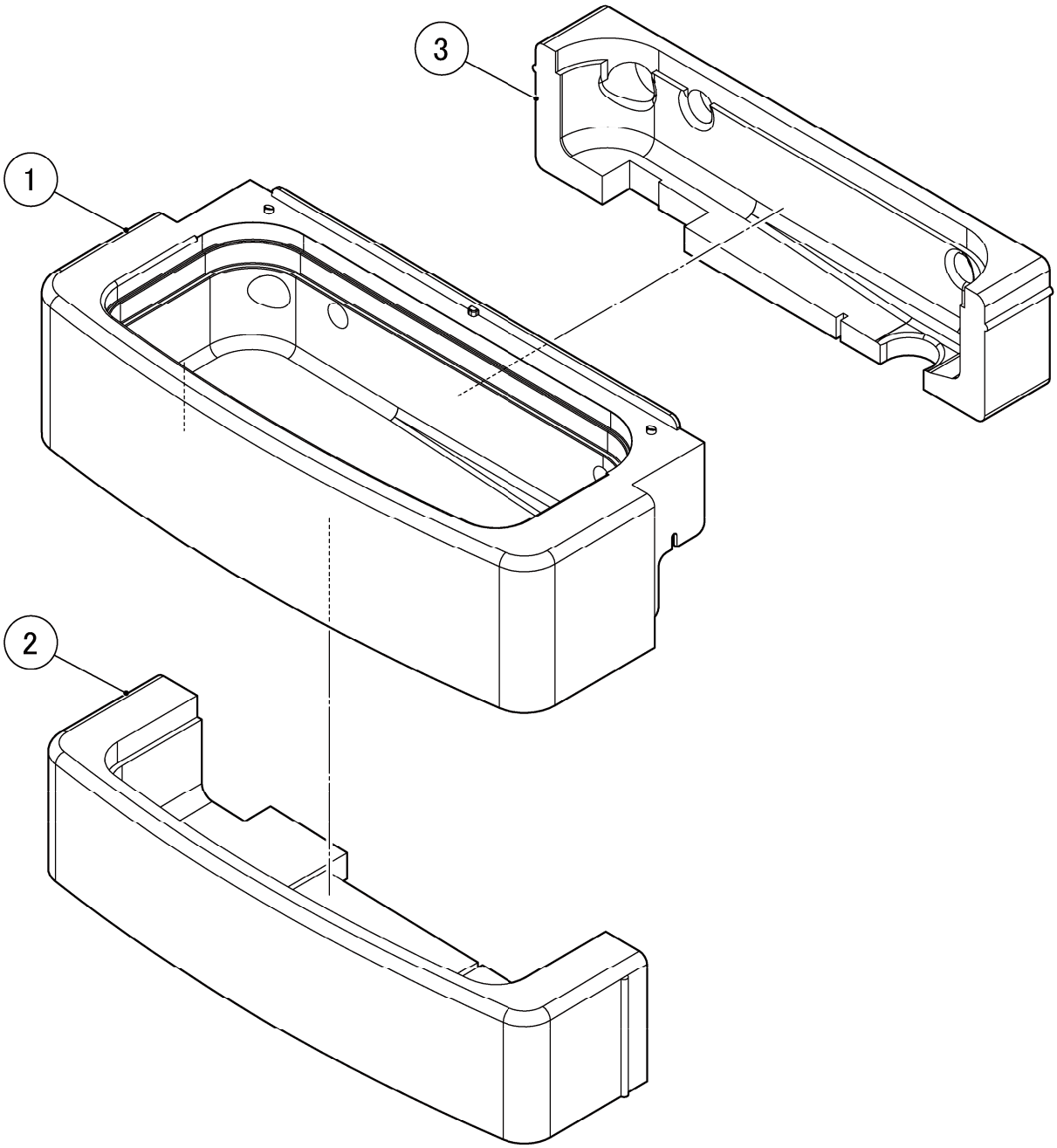
3
1
2

GENERAL

MODEL: **DCM-60KE(-P)**

TITLE: **E. DRAIN PANEL ASSY**

INDEX NO.	DESCRIPTION	MATERIAL OR MODEL NUMBER	PART NUMBER	REQ'D NUMBER			
				B-1	B-2	B-3	
1	DRAIN PANEL		121229P01	1	1	1	
2	INSULATION (A) - DRAIN PANEL		121238Z01	1	1	1	
3	INSULATION (B) - DRAIN PANEL		121239Z01	1	1	1	

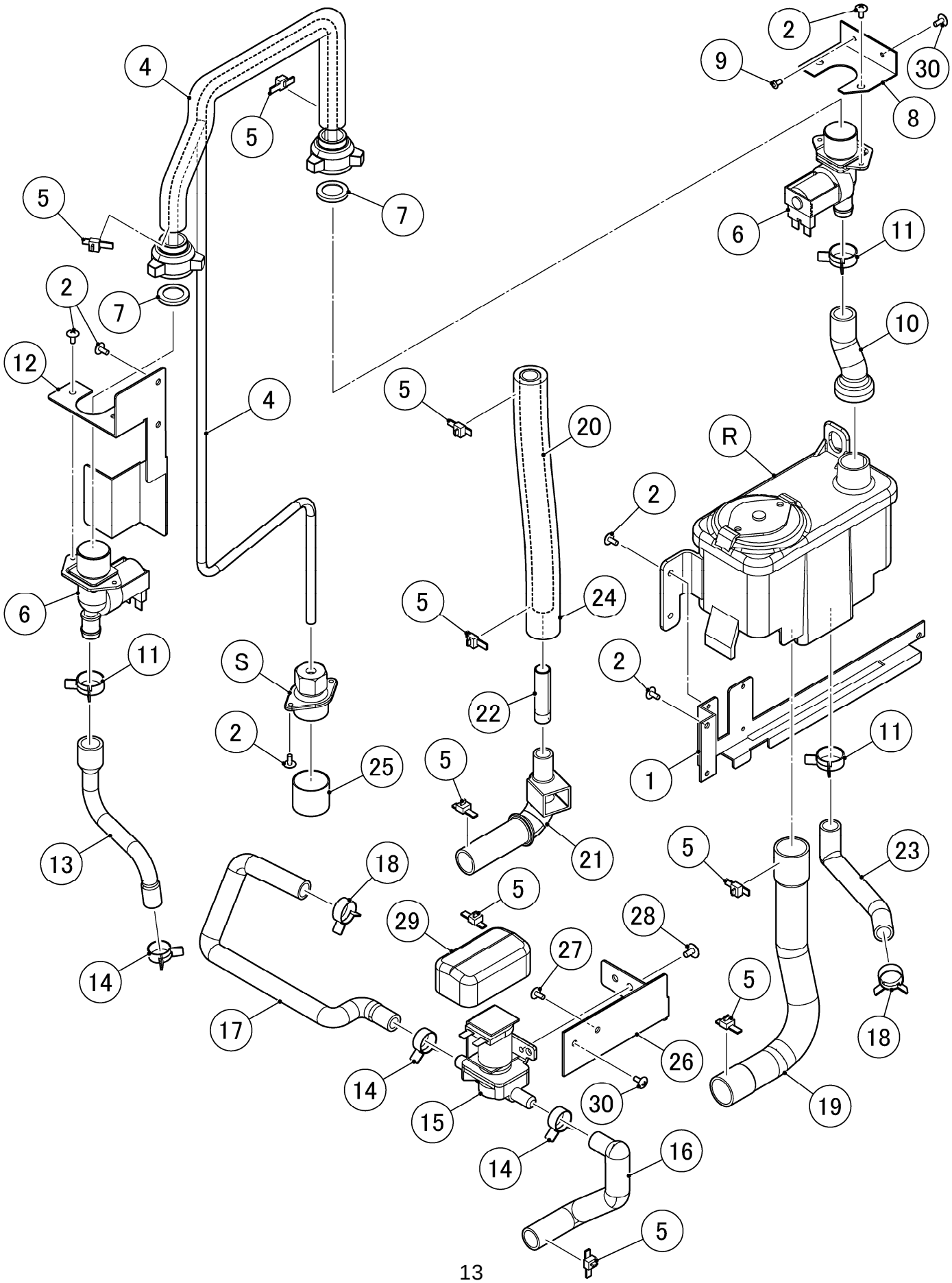
4
5
7
2
9
30
8
6
11
10
12
R
20
24
S
22
25
1
21
13
18
29
28
27
23
14
17
26
15
16
19

GENERAL

MODEL: **DCM-60KE(-P)** TITLE: **F. WATER CIRCUIT**

INDEX NO.	DESCRIPTION	MATERIAL OR MODEL NUMBER	PART NUMBER	REQ'D NUMBER			
				B-1	B-2	B-3	
R	TANK ASSY		374930A01	1	1	1	
S	FITTING - WATER SUPPLY		376409A01	1	1	1	
1	RESERVOIR BRACKET		262223M01	1	-	-	
			264207M01		1	1	
2	TRUSS HEAD SCREW		FST0408S0	11	12	12	
3	PIPE - WATER SUPPLY		376464G01	1	1	1	
4	INSULATION TUBE		H71020B48	1	1	1	
5	NYLON TIE	CV-200	7920-0010	9	9	9	
6	WATER VALVE		452993-01	2	2	2	
7	STOPPER COVER(R)		4X1497G01	2	2	2	
8	BRACKET (A) - WV		476731M01	1	-		
			478031M01		1	1	
9	RIVET	SSD42SSBS(t1.6 - 3.2)	7170-0002	2	-		
10	HOSE - WATER SUPPLY		374933R01	1	1	1	
11	CLIP BAND		423866-05	3	3	3	
12	BRACKET(B) - WV		376449M01	1	1	1	
13	HOSE (B) - WATER SUPPLY		475485R01	1	1	1	
14	CLIP BAND		423866-01	3	3	3	
15	WATER VALVE		468655-01	1	1	1	
16	HOSE - WV OUTLET		377147P01	1	1	1	
17	HOSE(70) - EVA OUTLET		377146P01	1	1	1	
18	CLAMP		423866-04	2	2	2	
19	OVERFLOW HOSE - 60AD		374984G01	1	1	1	
20	HOSE (J)		334235-06	1	1	1	
21	HOSE 60 - GM DRAIN		376465G01	1	1	1	
22	CONNECTION PIPE		475535M01	1	1	1	
23	HOSE (60) - EVA INLET		475508R01	1	1	1	
24	INSULATION TUBE		H71626250	1	1	1	

GENERAL

MODEL: **DCM-60KE(-P)**			TITLE: **F. WATER CIRCUIT**				
INDEX NO.	DESCRIPTION	MATERIAL OR MODEL NUMBER	PART NUMBER	REQ'D NUMBER			
				B-1	B-2	B-3	
25	CAP		417323-01	1	1	1	
26	VALVE BRACKET		377145M01	1	-		
			377713M01		1	1	
27	T2 TRUSS HEAD SCREW		FT20408F0	2	-		
28	TRUSS HEAD SCREW		FST0508F0	2	2	2	
29	COVER		463633-01	1	1	1	
30	TRUSS HEAD SCREW		FST0408F0		4	4	

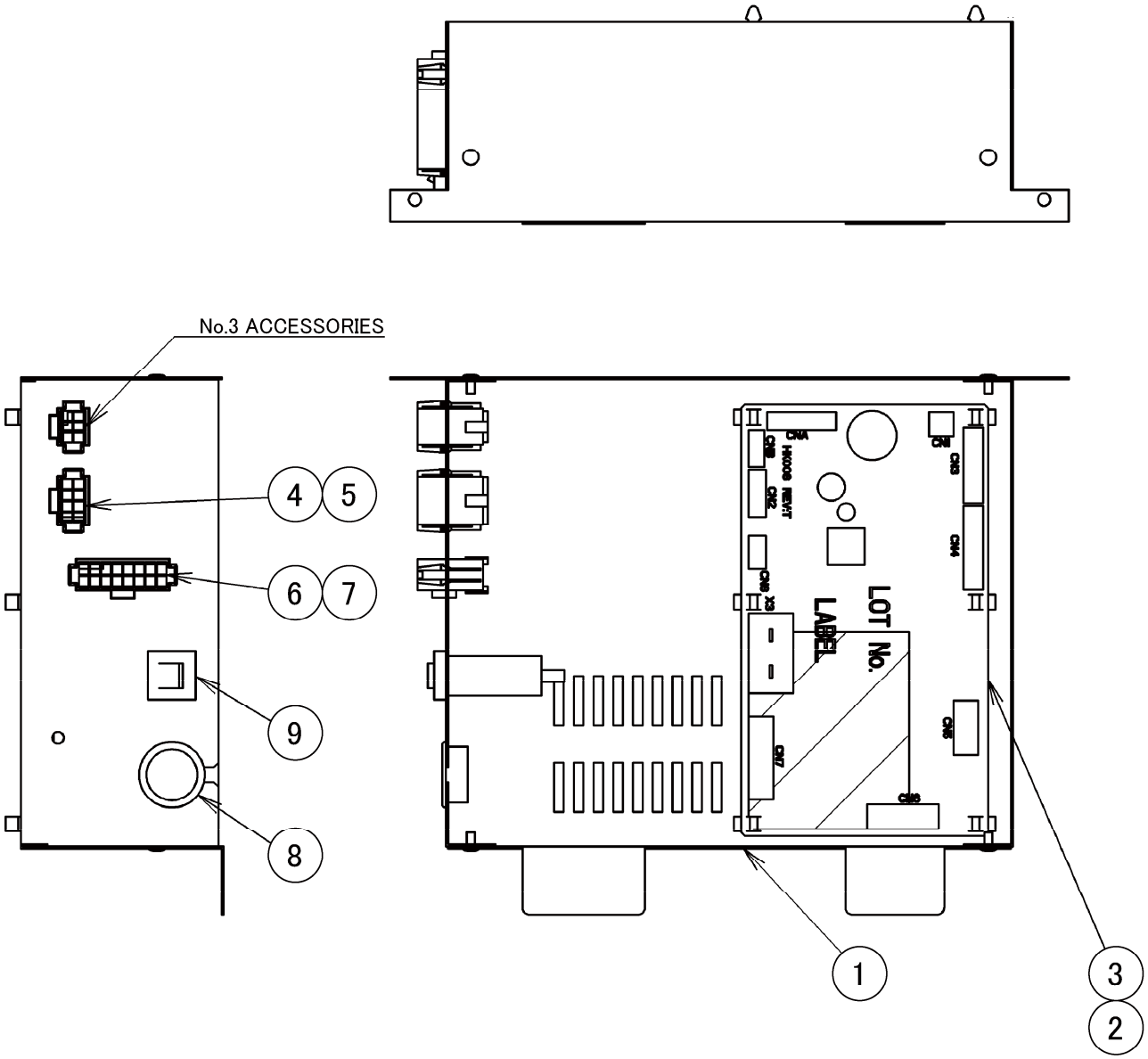
No.3 ACCESSORIES
4
5
6
7
9
8
LOT No.
LABEL
1
3
2

GENERAL

MODEL: **DCM-60KE(-P)** TITLE: **G. CONTROL BOX ASSY**

INDEX NO.	DESCRIPTION	MATERIAL OR MODEL NUMBER	PART NUMBER	REQ'D NUMBER			
				B-1	B-2	B-3	
1	CONTROL BOX		377199G01	1	1	1	
2	BOARD SUPPORT		414929-01	6	6	6	
3	CONTROLLER BOARD - 10DCM		P02107-99	1	1	1	
4	RECEPTACLE HOUSING		454246-05	1	1	1	
5	RETAINER		455609-03	2	2	2	
6	RECEPTACLE HOUSING		454246-10	1	1	1	
7	RETAINER		455609-05	2	2	2	
8	BUSHING		428394-05	1	1	1	
9	PROTECTOR		440972-01	1	1	1	

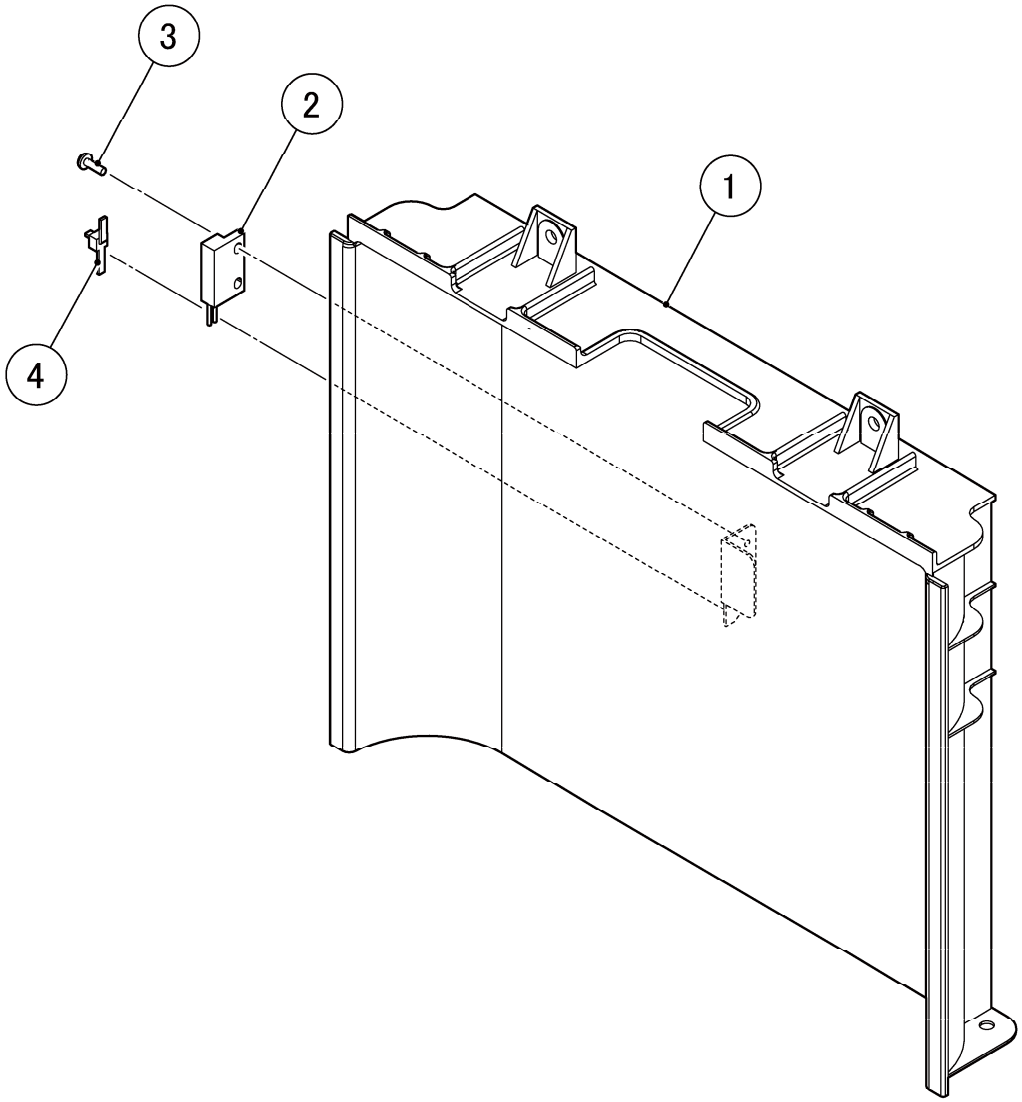
3
2
1
4

GENERAL

MODEL: **DCM-60KE(-P)**

TITLE: **H. FRONT PANEL ASSY - 115LO**

INDEX NO.	DESCRIPTION	MATERIAL OR MODEL NUMBER	PART NUMBER	REQ'D NUMBER			
				B-1	B-2	B-3	
1	FRONT PANEL (LO) - 60		375179G01	1	1	1	
2	REED SWITCH		431788-01	1	1	1	
3	PAN HEAD MACHINE SCREW		FSP0308S0	2	2	2	
4	TIE	CV-100	7920-0002	1	1	1	

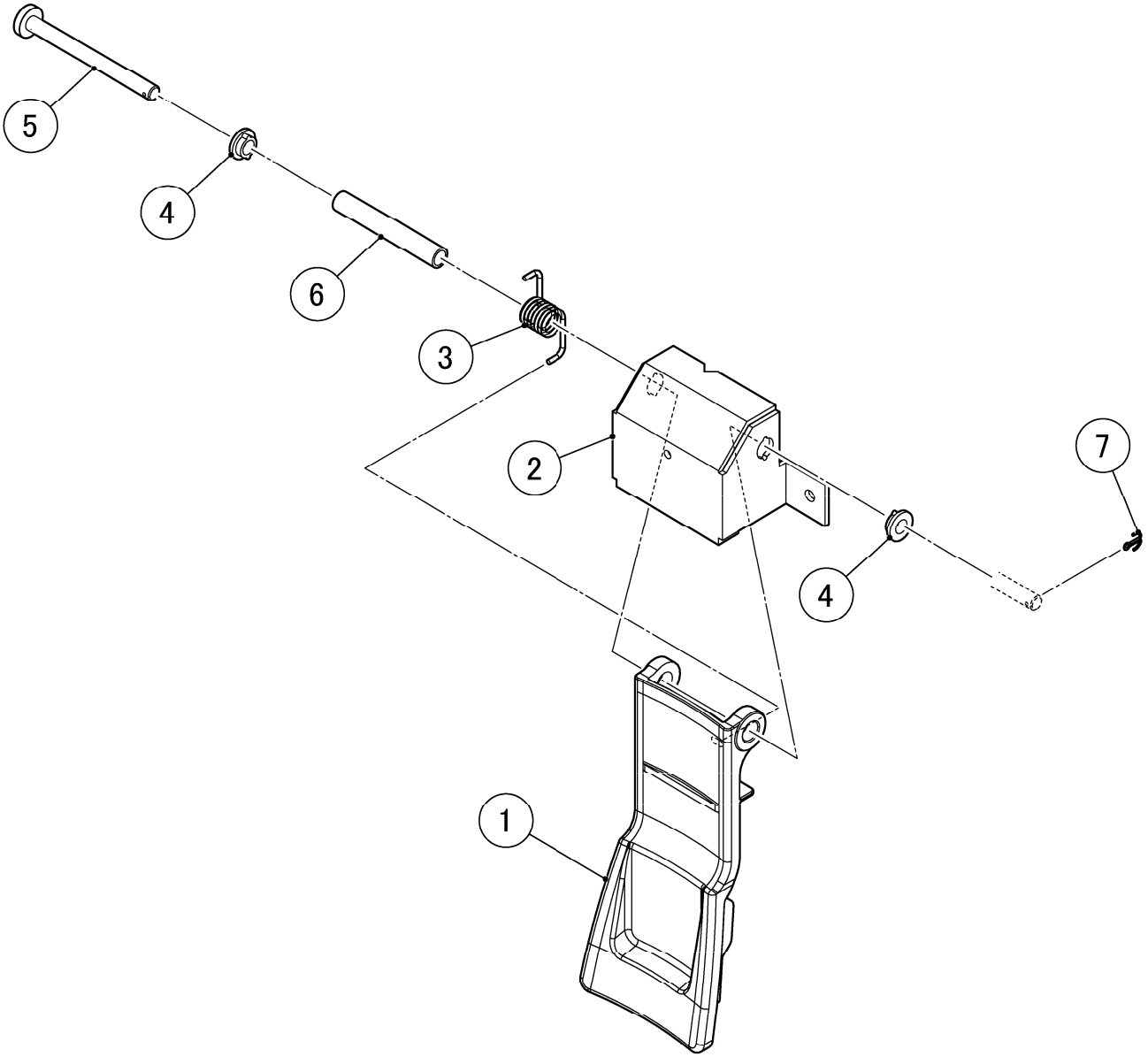
5
4
6
3
2
7
4
1

GENERAL

MODEL: **DCM-60KE(-P)**

TITLE: **J. LEVER - UNIT**

INDEX NO.	DESCRIPTION	MATERIAL OR MODEL NUMBER	PART NUMBER	REQ'D NUMBER			
				B-1	B-2	B-3	
1	LEVER ASSY		375131G01	1	1	1	
2	BRACKET - LEVER		376457M01	1	1	1	
3	SPRING (C)		475483M01	1	1	1	
4	SPACER (A)		461230-01	2	2	2	
5	SHAFT - LEVER		475538M01	1	1	1	
6	TUBE		475537P01	1	1	1	
7	SPLIT PIN		711SP1612	1	1	1	

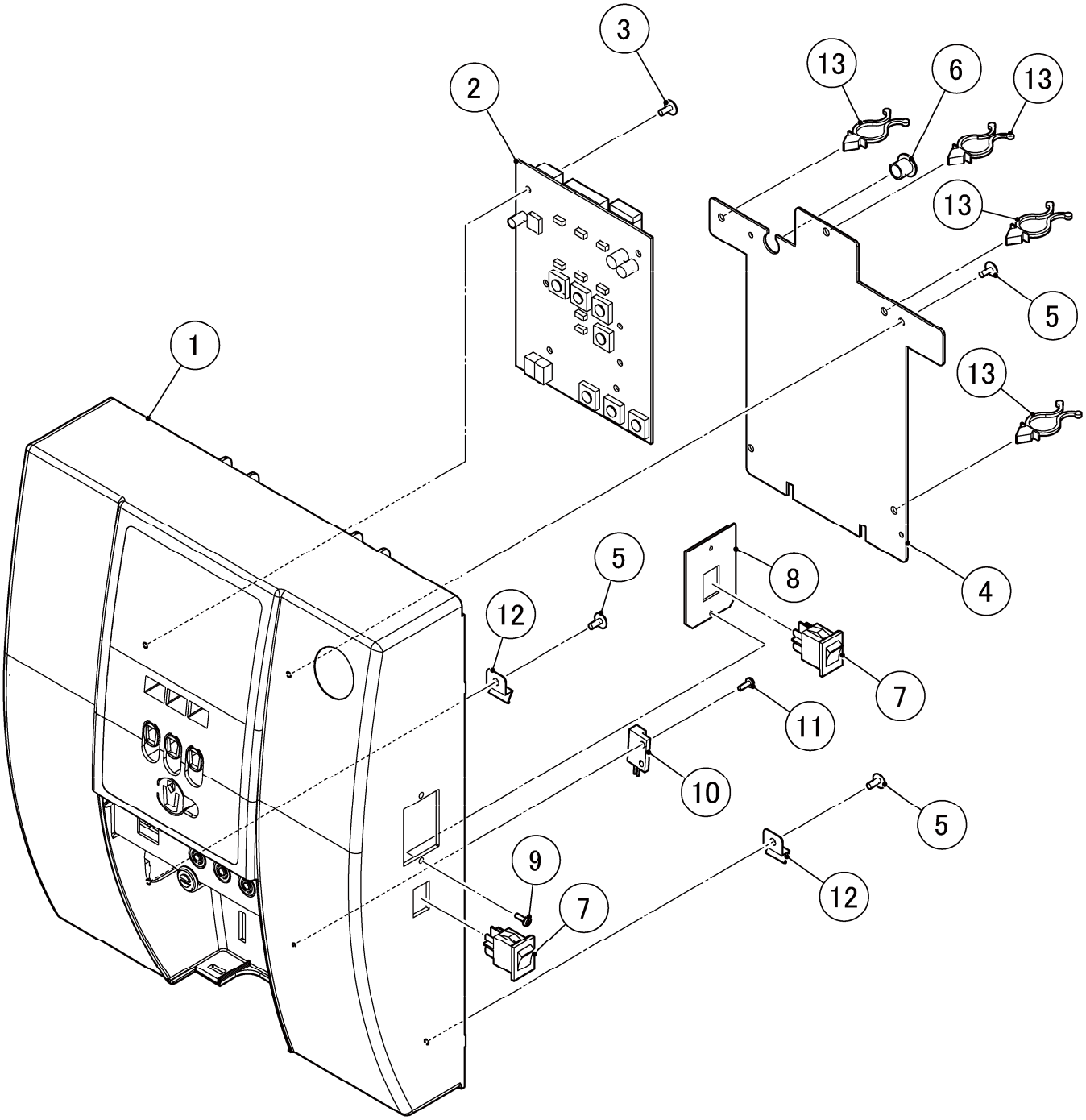
3
2
13
6
13
13
5
1
13
5
8
4
12
7
11
10
5
9
7
12

GENERAL

MODEL: **DCM-60KE(-P)** TITLE: **K. FRONT PANEL (UP)**

INDEX NO.	DESCRIPTION	MATERIAL OR MODEL NUMBER	PART NUMBER	REQ'D NUMBER			
				B-1	B-2	B-3	
1	FRONT PANEL (UPG) - 70		261905G01	1	1	1	
2	OPERATION BOARD - 10DCM		P02108-01	1	1	1	
3	T2 TRUSS HEAD SCREW P		FT70408M0	7	7	7	
4	COVER - OPERATION		376458M01	1	1	1	
5	T2 TRUSS HEAD SCREW		FT20408S0	4	4	4	
6	BUSHING		428394-02	1	1	1	
7	ROCKER SWITCH		P02696-01	2	2	2	
8	BRACKET - SWITCH		476734M01	1	1	1	
9	SCREW - BLACK		P02648-01	2	2	2	
10	REED SWITCH		431788-01	1	1	1	
11	PAN HEAD TAPPING SCREW T2		FT50308M0	2	2	2	
12	HOOK/FRONT		475487M01	2	2	2	
13	WIRE RETAINER	No.4253	427902-05	4	4	4	

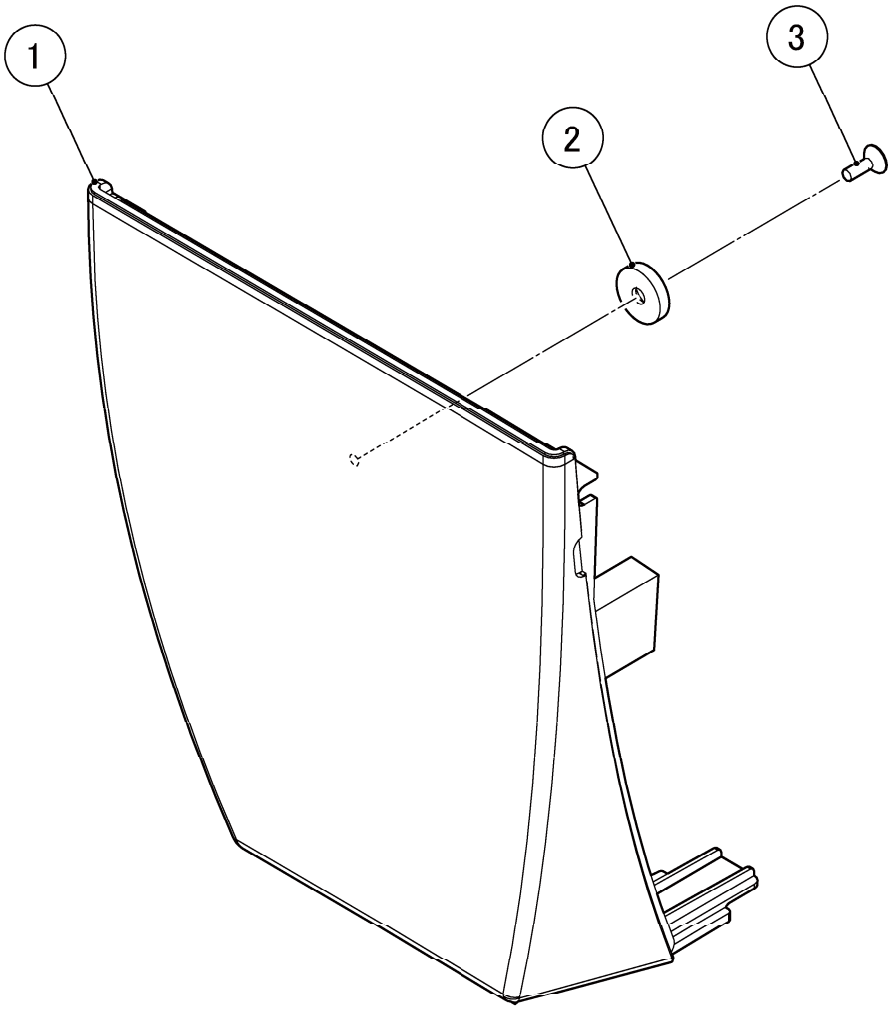
1
2
3

GENERAL

MODEL: **DCM-60KE(-P)** TITLE: **L. FRONT COVER**

INDEX NO.	DESCRIPTION	MATERIAL OR MODEL NUMBER	PART NUMBER	REQ'D NUMBER			
				B-1	B-2	B-3	
1	COVER - FRONT		475701G01	1	1	1	
2	CATCH		P02548-01	1	1	1	
3	TAPPING SCREW -COUNTERSUNK		P02195-01	1	1	1	

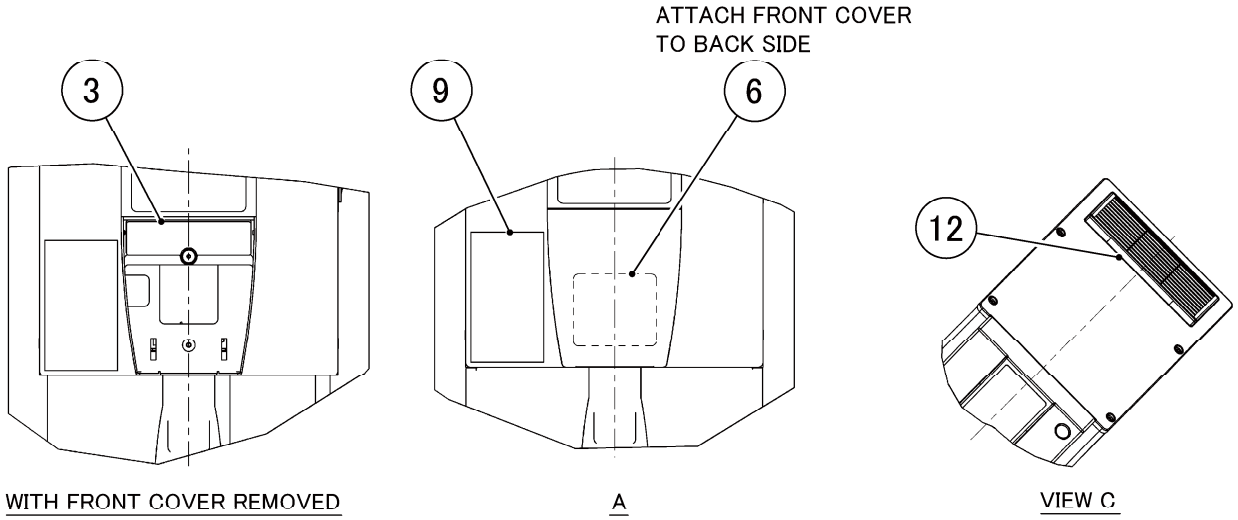
ATTACH FRONT COVER
TO BACK SIDE
3
9
6
12
WITH FRONT COVER REMOVED
A
VIEW C

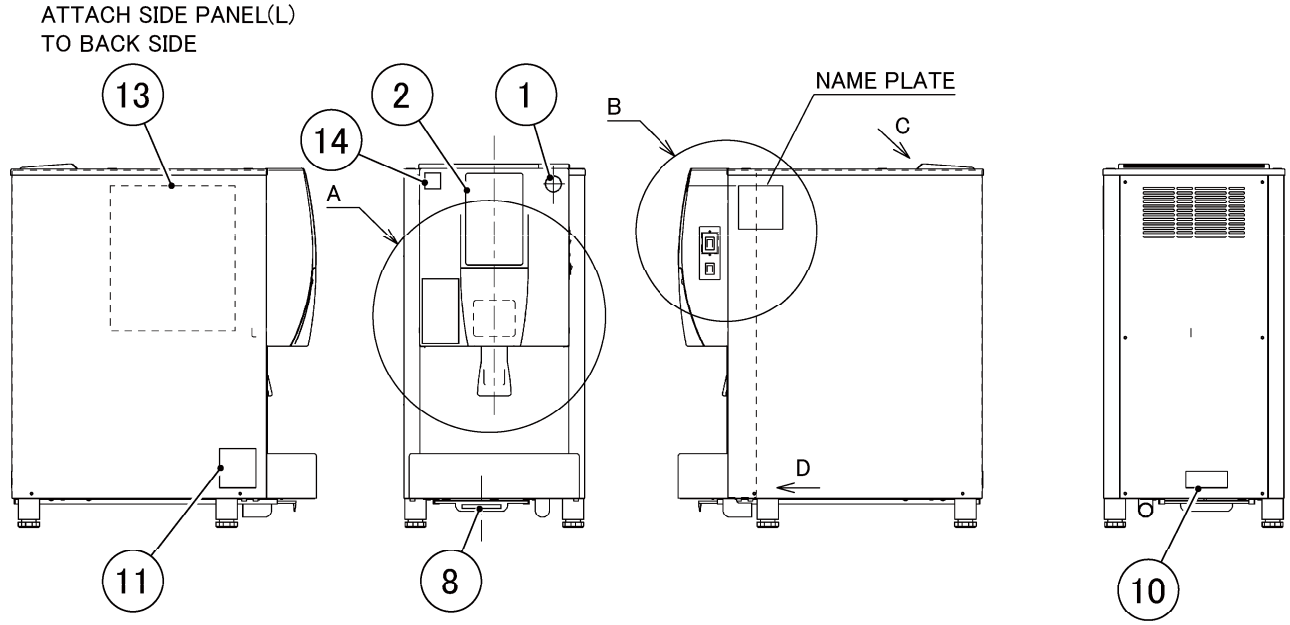
ATTACH SIDE PANEL(L)
TO BACK SIDE
13
2
1
14
A
B
NAME PLATE
C
D
11
8
10

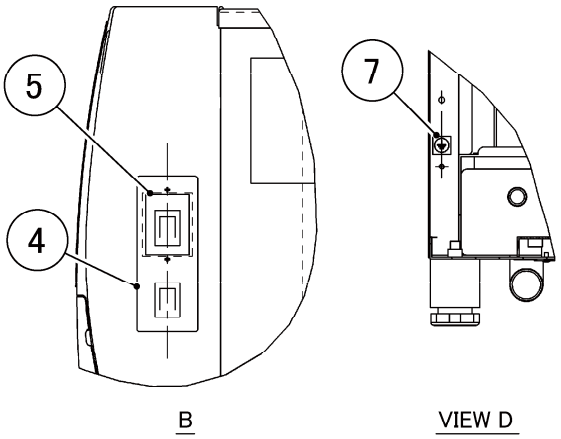
5
4
7
B
VIEW D

GENERAL

MODEL: **DCM-60KE(-P)** TITLE: **M. LABEL LOCATION**

INDEX NO.	DESCRIPTION	MATERIAL OR MODEL NUMBER	PART NUMBER	REQ'D NUMBER			
				B-1	B-2	B-3	
1	LABEL - PENGUIN		477394L01	1	1	1	
2	OPERATION LABEL		376360L01	1	1	1	
		DCM-60KE-P	376360L02	1	1	1	
3	CONTROL LABEL		376358L01	1	1	1	
4	LABEL-POWER SUPPLY A		476672L01	1	1	1	
5	LABEL-POWER SUPPLY B		476718L01	1	1	1	
6	LABEL-SPOUT		476671L01	1	1	1	
7	LABEL - EARTH (B)		450452-02	1	1	1	
8	LABEL - AIR FILTER		452799-01	1	1	1	
9	WARNING LABEL		376359L01	1	1	1	
10	CAUTION LABEL		476902L01	1	1	1	
11	CAUTION LABEL - SERVICE		471180L01	1	1	1	
12	CAUTION LABEL		477575L01	1	1	1	
13	WIRING LABEL		262508L01	1	1	1	
14	LABEL - HACCP		476519L01	1	1	1	

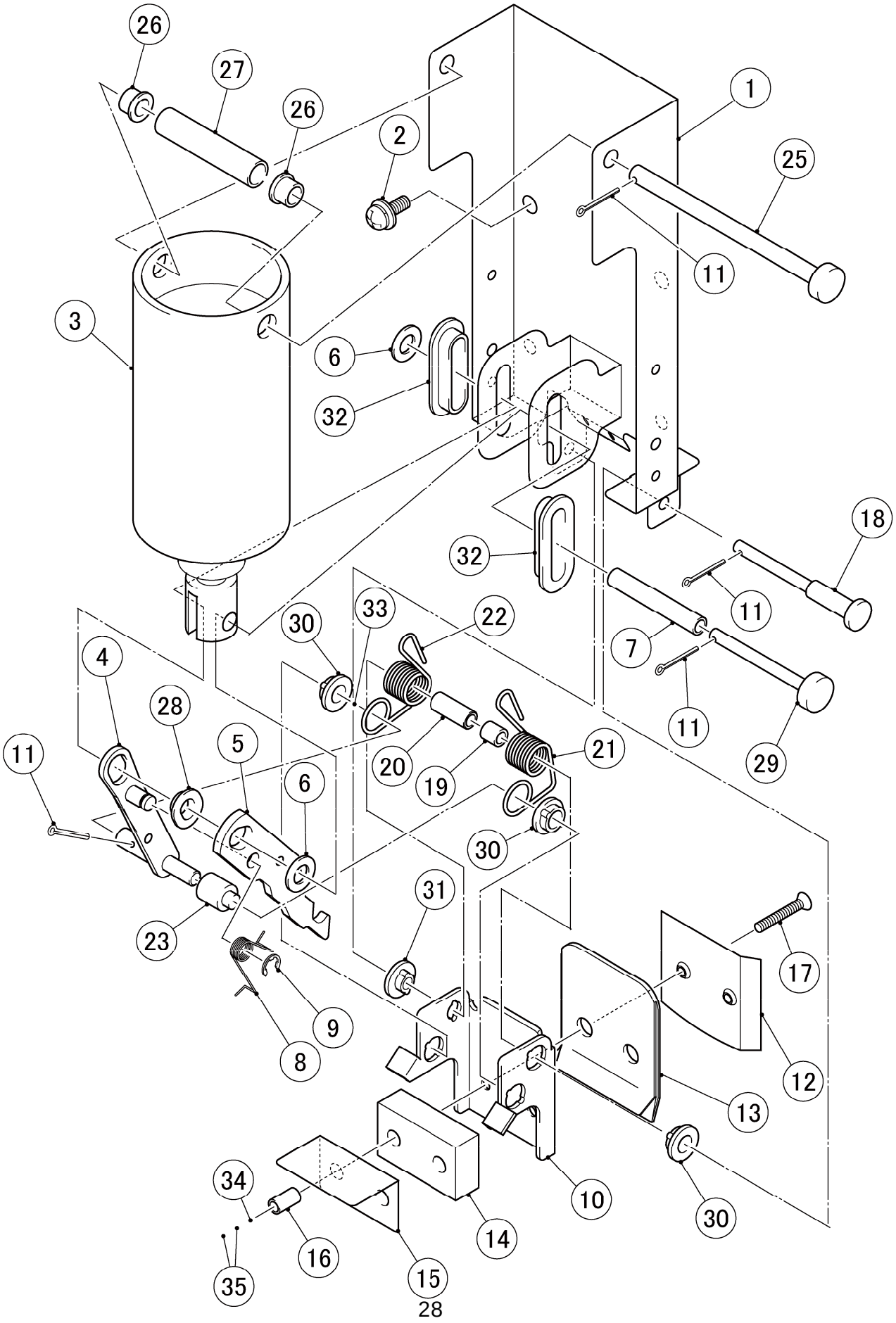
26
27
26
2
1
25
11
3
6
32
32
18
11
7
11
29
30
33
22
4
28
5
11
20
19
21
6
30
31
23
17
9
8
12
13
34
10
30
14
16
15
35

GENERAL

MODEL: **DCM-60KE(-P)** TITLE: **N. SHUTTER ASSY**

INDEX NO.	DESCRIPTION	MATERIAL OR MODEL NUMBER	PART NUMBER	REQ'D NUMBER			
				B-1	B-2	B-3	
1	BRACKET - SOLENOIDO		351479G01	1	1	1	
2	SCREW		434838-02	4	4	4	
3	SOLENOID		P02647-01	1	1	1	
4	SHAFT		462262G01	1	1	1	
5	HOOK - SHUTTER		438406-02	1	1	1	
6	SPACER		454943-01	2	2	2	
7	TUBE		451284-06	1	1	1	
8	SPRING		411532-01	1	1	1	
9	ERING		721S-0004	1	1	1	
10	STOPPER		351480-01	1	1	1	
11	SPLIT PIN		711SP1612	4	4	4	
12	SHUTTER PLATE (A1)		414756-01	1	1	1	
13	PLATE (B) - SHUTTER		466047-01	1	1	1	
14	CUSHION		419150-01	1	1	1	
15	PLATE (D) - SHUTTER		466063-01	1	1	1	
16	SHUTTER COLLAR (C)		411539-03	2	2	2	
17	SCREW		441581-01	2	2	2	
18	SHAFT (B)		462561-01	1	1	1	
19	TUBE		451284-05	1	1	1	
20	COLLAR		454942-01	1	1	1	
21	SPRING (R)		452502-01	1	1	1	
22	SPRING (L)		452503-01	1	1	1	
23	SHAFT (B2)		432520-02	1	1	1	
24	SHAFT - SOLENOID		462257-01	1	1	1	
25	BUSH		462558-02	2	2	2	
26	COLLAR - SOLENOID		462559-01	1	1	1	
27	SPACER (D)		461233-01	1	1	1	
28	SHAFT - PLUNGER		462258-01	1	1	1	
29	SPACER (A)		461230-01	3	3	3	

GENERAL

MODEL: **DCM-60KE(-P)**			TITLE: **N. SHUTTER ASSY**				
INDEX NO.	DESCRIPTION	MATERIAL OR MODEL NUMBER	PART NUMBER	REQ'D NUMBER			
				B-1	B-2	B-3	
30	SPACER (B)		461231-01	1	1	1	
31	SPACER(C)		461232-01	2	2	2	
32	FLAT WASHER		FWPL06S0	1	1	1	
33	FLAT WASHER		FWPL03S0	2	2	2	
34	NUT		FNH103S0	4	4	4	

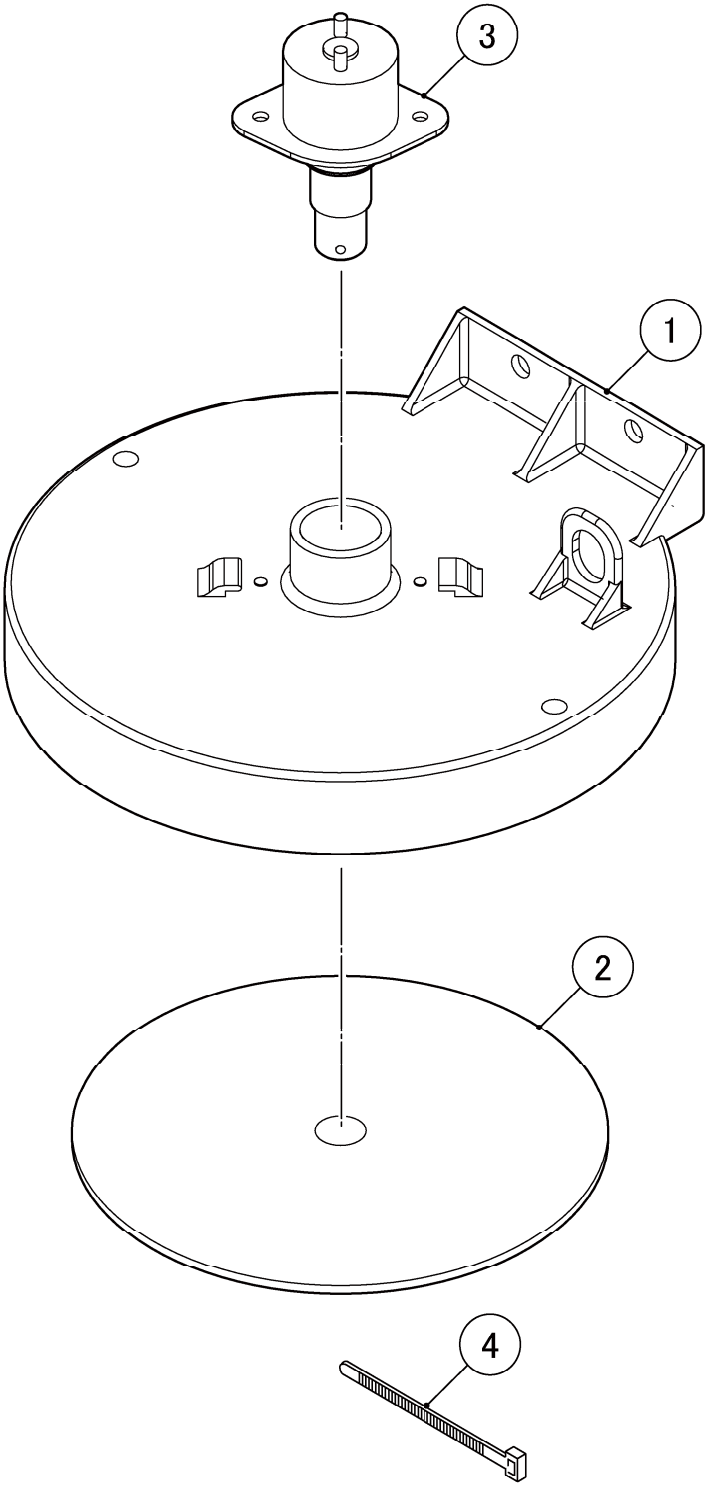
3
1
2
4

GENERAL

MODEL: **DCM-60KE(-P)**

TITLE: **P. COVER ASSY - BIN TOP**

INDEX NO.	DESCRIPTION	MATERIAL OR MODEL NUMBER	PART NUMBER	REQ'D NUMBER			
				B-1	B-2	B-3	
1	COVER - BIN		329037G01	1	1	1	
2	BALANCE PLATE		442910-01	1	1	1	
3	BIN CONTROL ASSY		459673-01	1	1	1	
4	TIE	CV-100	7920-0002	1	1	1	

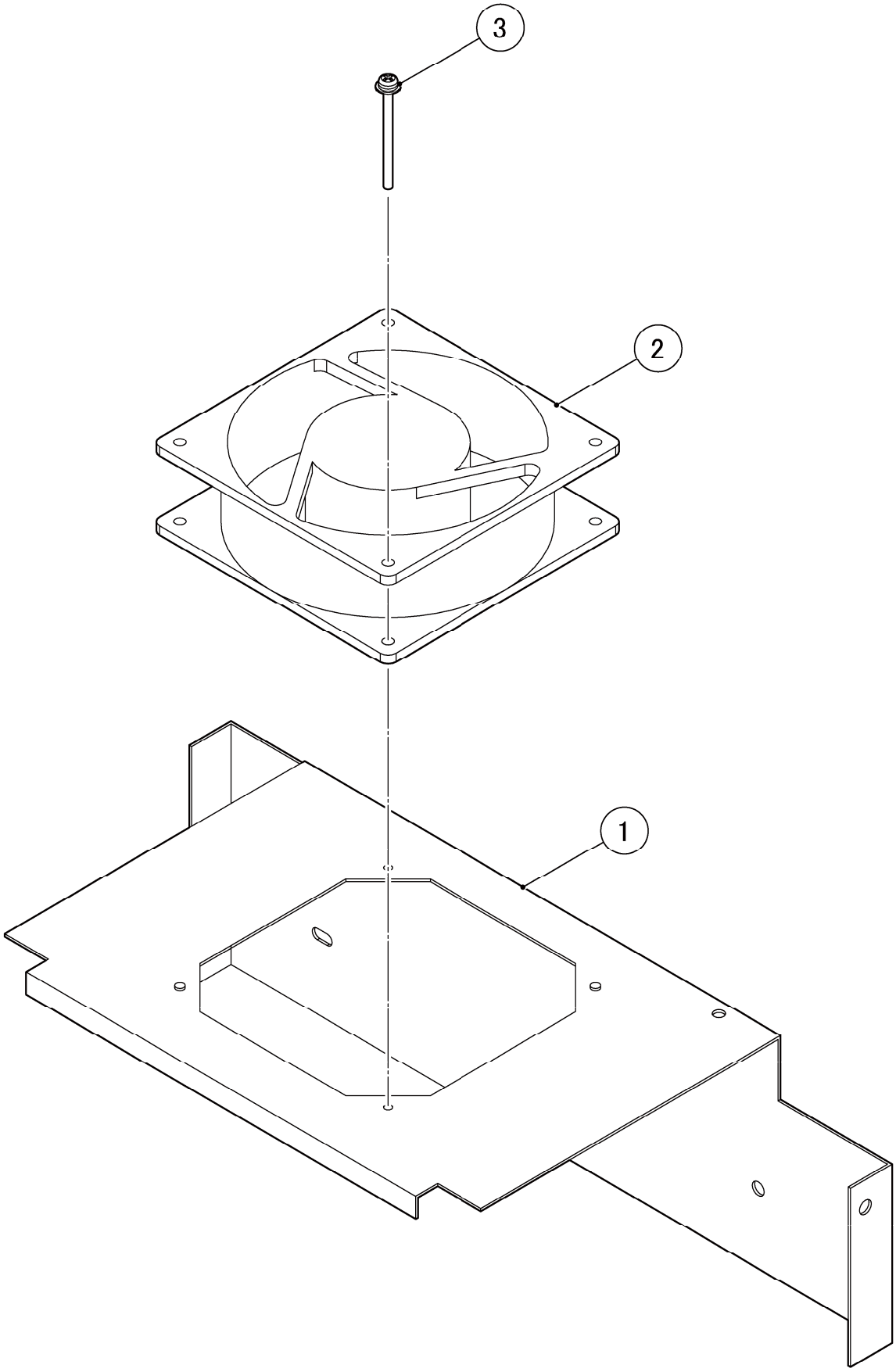
3
2
1

GENERAL

MODEL: **DCM-60KE(-P)** TITLE: **Q. FAN MOTOR ASSY**

INDEX NO.	DESCRIPTION	MATERIAL OR MODEL NUMBER	PART NUMBER	REQ'D NUMBER			
				B-1	B-2	B-3	
1	BRACKET - FM		262221M01	1	1	1	
2	FAN MOTOR		P02685-01	1	1	1	
3	PAN HEAD MACHINE SCREW (SPRING WASHER AND FLAT WASHER)		FSK0445S0	2	2	2	

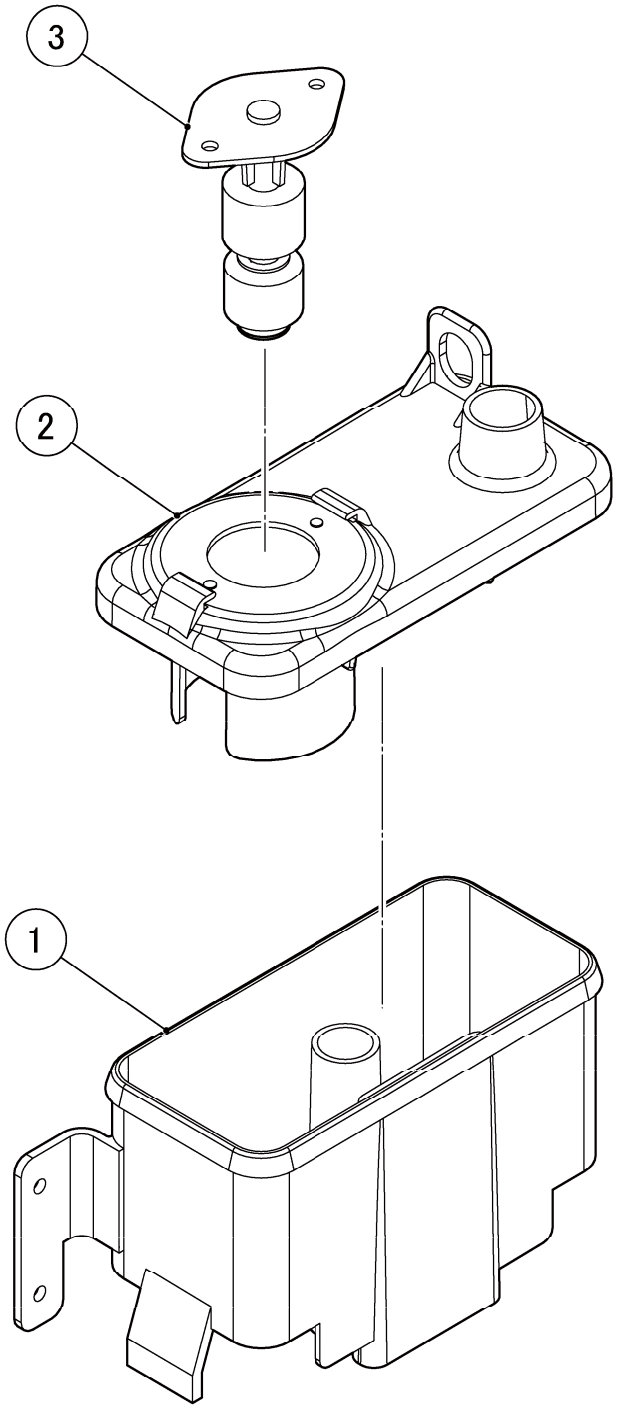
3
2
1

GENERAL

MODEL: **DCM-60KE(-P)**

TITLE: **R. TANK ASSY**

INDEX NO.	DESCRIPTION	MATERIAL OR MODEL NUMBER	PART NUMBER	REQ'D NUMBER			
				B-1	B-2	B-3	
1	RESERVOIR		217620-02	1	1	1	
2	RESERVOIR COVER		217621-02	1	1	1	
3	FLOAT SWITCH		435490-01	1	1	1	

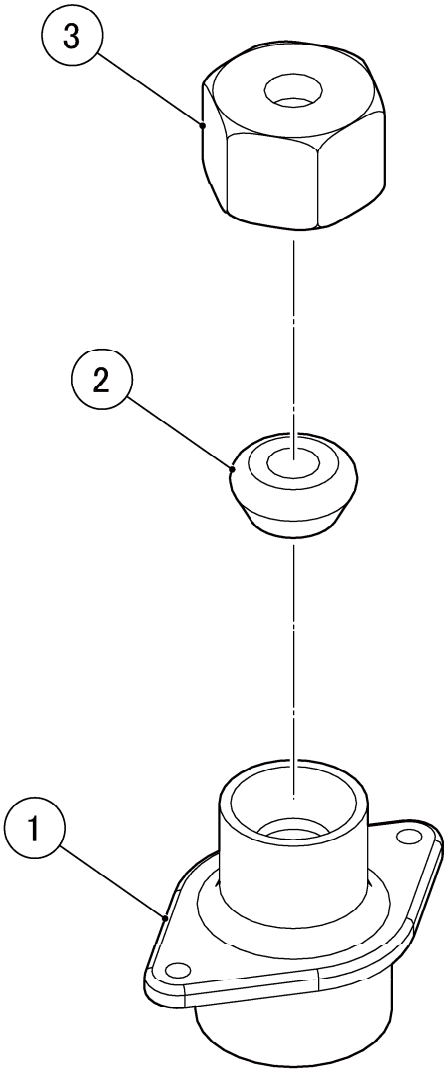
3
2
1

GENERAL

MODEL: **DCM-60KE(-P)**

TITLE: **S. FITTING - WATER SUPPLY**

INDEX NO.	DESCRIPTION	MATERIAL OR MODEL NUMBER	PART NUMBER	REQ'D NUMBER			
				B-1	B-2	B-3	
1	FITTING - WATER SUPPLY		376409M01	1	1	1	
2	TAPPERED PACKING		415715-04	1	1	1	
3	CAP - FLARE		415713-02	1	1	1	

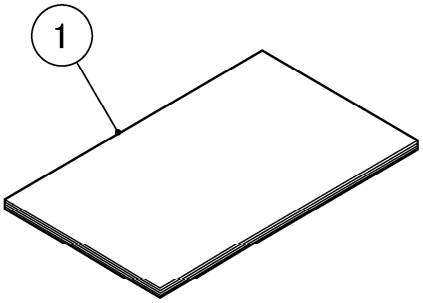
1

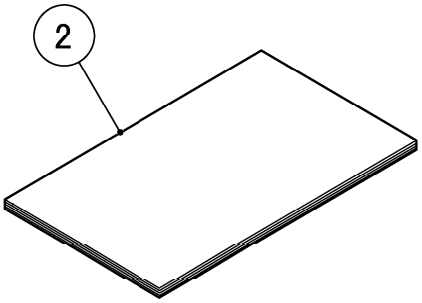
2

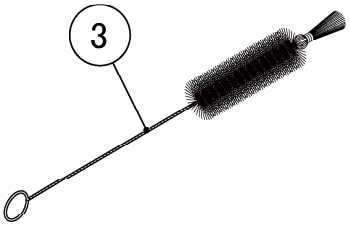
3

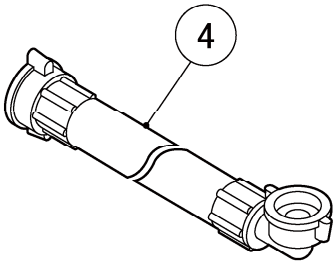
4

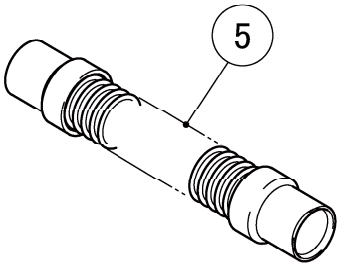
5

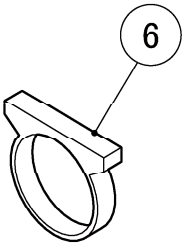
6

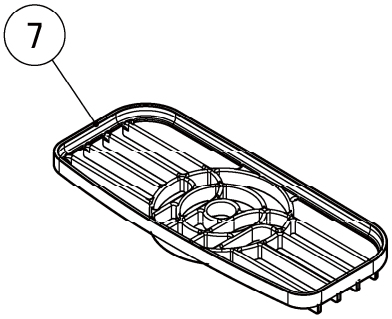
7

GENERAL

MODEL: **DCM-60KE(-P)** TITLE: **T. ACCESSORIES**

INDEX NO.	DESCRIPTION	MATERIAL OR MODEL NUMBER	PART NUMBER	REQ'D NUMBER			
				B-1	B-2	B-3	
1	INSTRUCTION MANUAL		L1L009202	1	1	1	
		CHINA	L1L009301	1	1	1	
2	INSTRUCTION MANUAL		122234L01	1	1	1	
3	CLEANING BRUSH		457264-01	1	1	1	
4	INLET HOSE		450722-01	1	1	1	
5	DRAIN HOSE		446730-01	1	1	1	
6	HOSE CLAMP	25*30	435947-08	1	1	1	
7	GRILLE		259896P01	1	1	1	